ANYLOAD®

LOAD CELLS & WEIGHING COMPONENTS

2025

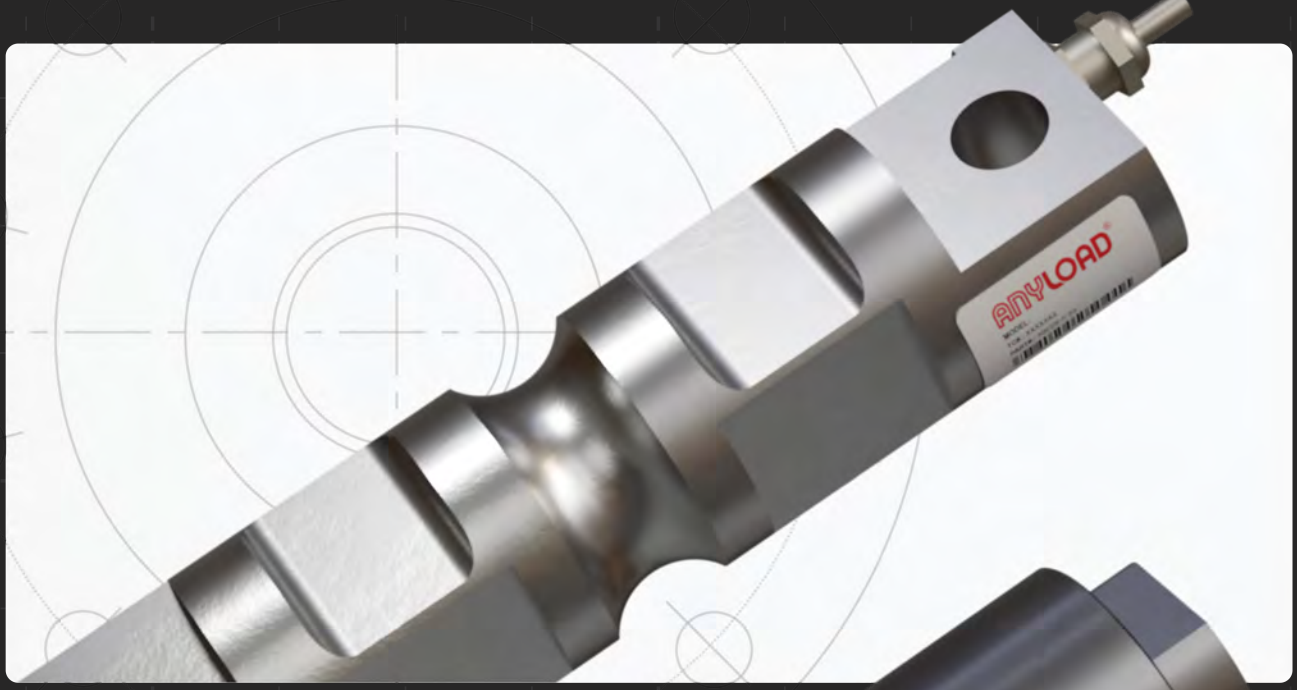

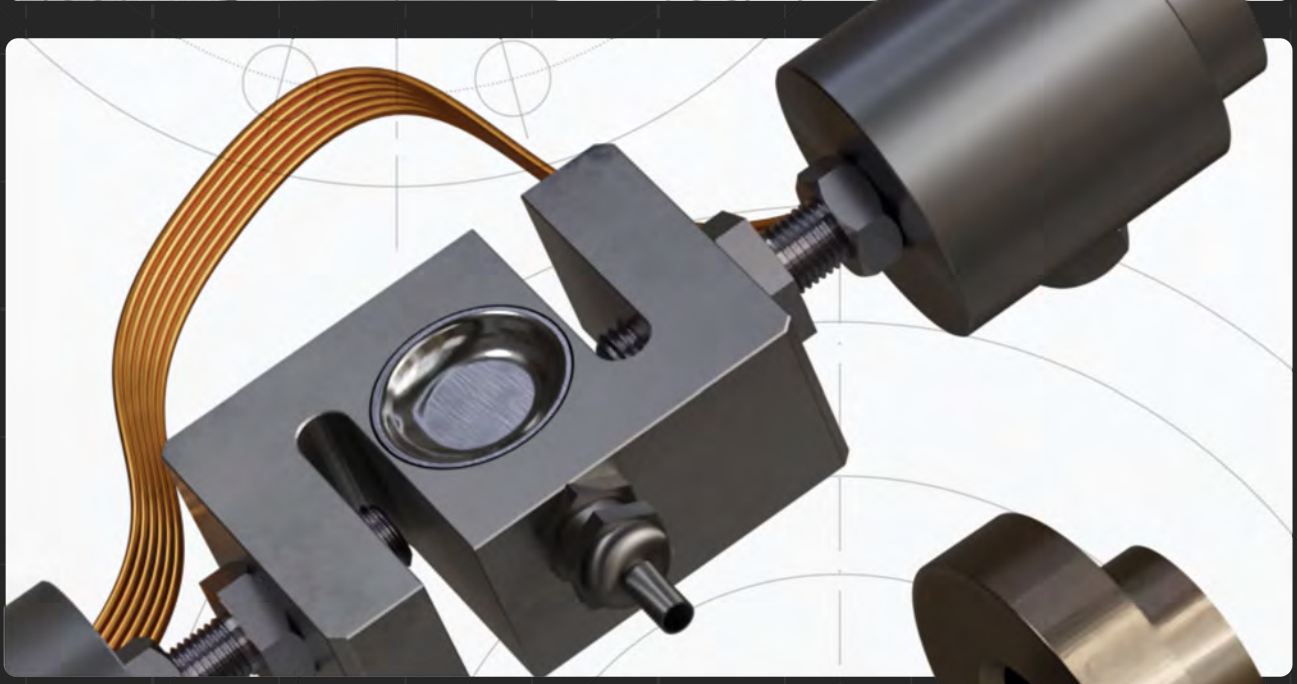

ANYLOAD®

Manufacturer with Immediate Access to Engineering Support

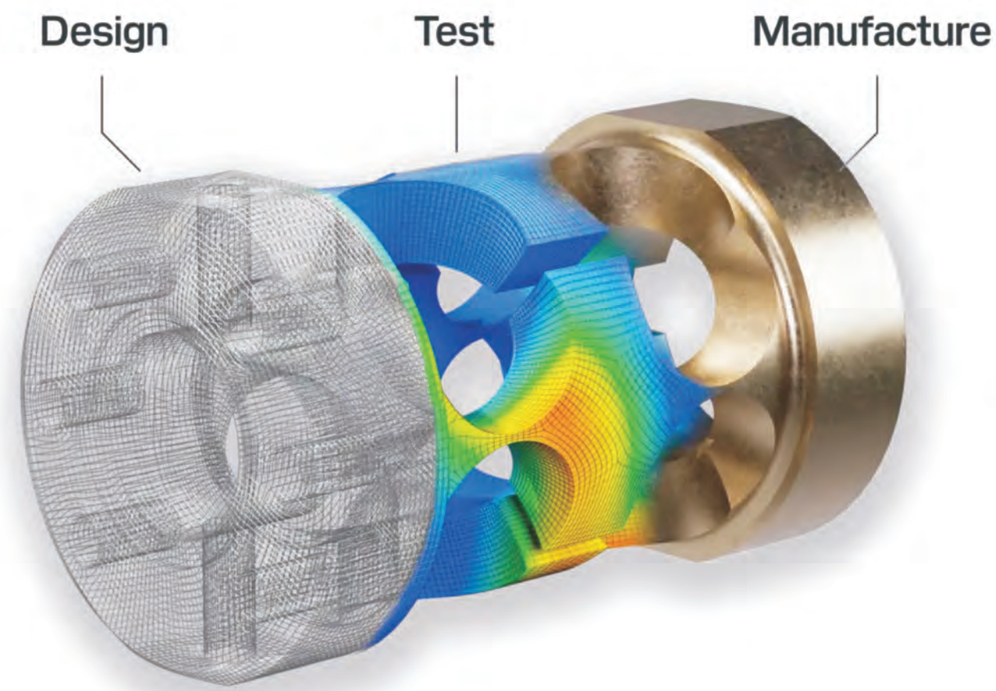

1st STOP for Scale Dealer Service & OEM Solutions

NTEP · OIML · FM APPROVED · IECEx · ATEX · CE · RoHS

ANYLOAD PROFILE

Since 1991, ANYLOAD has been an integrated design and manufacturing company specializing in the development and production of load cells, force transducers, indicators, remote displays, weighing and measurement components, and complete scales. In addition to supporting our customers and the conventional weighing industry with an array of standard industry product models, we specialize in customized solutions developed to the highest quality standards. We strive for industry-leading innovation while keeping to our fundamental principles of quality, value, and customer satisfaction.

Custom weighing and Measurement Solutions

For over 30 years, ANYLOAD has been providing custom weighing and measurement solutions for a wide range of applications and industries around the world. Equipped with an industry-leading collection of test machinery, a large technical design team, and geared for both small and large volume manufacturing, we offer "fast prototyping" design services, ranging from customer-specific solutions to modifications of our own products to suit our customers' unique applications for any sector.

Approvals and Certifications

As an ISO 9001:2015 certified and Verification Conformity Assessment Program (VCAP) registered company, we uphold the highest international standards for quality management, environmental practices, and product performance. We hold numerous patents on load cell designs as well as international compliance certificates such as (NTEP) set by the National Conference on Weights and Measure (NCWM), additional legal-for-trade certifications from the International Organization of Legal Metrology (OIML) and Measurement Canada (MC), Restriction of Hazardous Substance (RoHS), and Conformité Européene (CE). We are especially proud to hold the Factory Mutual (FM) Canada and US, International Electrotechnical Commission Explosive (IECEx), and (ATEX).

© 2025 ANYLOAD V1 dimensions and specifications subject to change without notice

RECENT MODELS

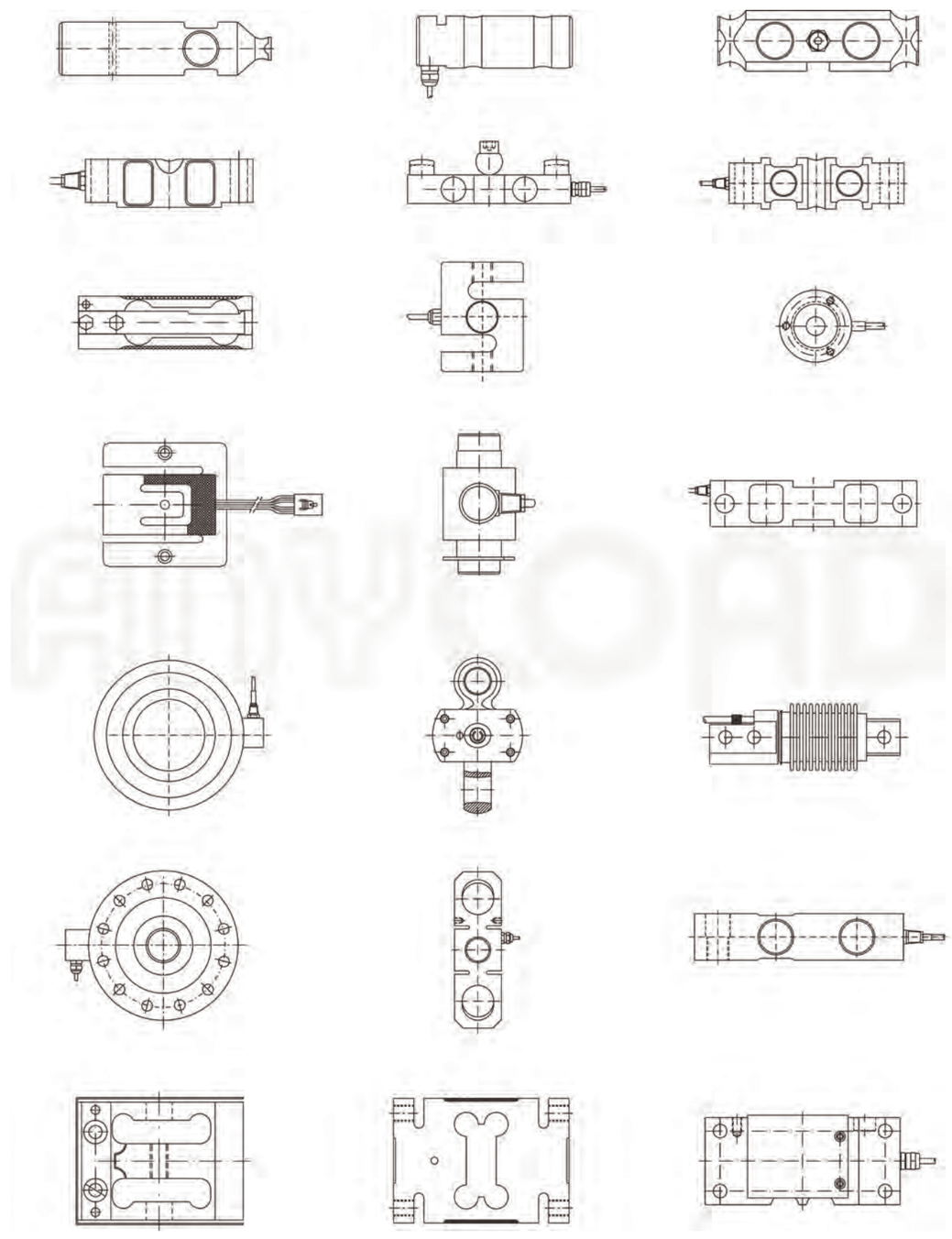

© 2025 ANYLOAD V1 dimensions and specifications subject to change without notice

Table of Content

COMPANY INFORMATION P2
RECENT MODELS P3
LOAD CELL INDEX P6

Single-Ended Beam Load Cells
563FSAS P19
563RS P20
563SH P21
563SHBB P22
563WS-WBL P23
563WS; 563WS30 ..... P24
563YA P26
563YH P27
563YH-23 ..... P28
563YS; 563YS30 ..... P29
563YHFK P30
563YHMS P31
563YHRT P32
563YSBK; 563YSBKUN P33
563YSLB P34
563YSLF P35
563YSMT P36
563YSMT-4 ..... P37
563YSRS P38
563YSSB P39

Double-Ended Beam Load Cells
102AH P40
102BH P41
102BS P42
102EHEL P43
102DH P44
102DS P45
102EH P46
102ES P47
102FS P48
102TH P49
102MH P50
102MHML P51
102RH P52
102RHGT P53

S-Beam Load Cells
101AH P54
101NSGS P55
101BH P56
101BS P57
101NH P58
101NH-LE P59

Single Point Load Cells
108AA P60
108AA3MUN P61
108BA P62
108BATD P63
108CA P64
651KSCS P65
108DA P66
108EA P67
108HAUN P68
108JA; 108JA-21 ..... P69
108LAMT P70
108LSMT P71
108KS; 108KSUN P72
651KS55UN P73
108MA; 108MAUN P74
108QS P76

Single Point Load Cells
108QSFL P77
108PA P78
108SA P79
108UA; 108UAUN P80
108TAYM; 108TAYM-01 ..... P81
108TA; 108TAUN P82
108TAAD P84
108TAAL P85
108TS; 108TSUN P86
108TSLL P87
108TSST P88
108TSVS P89
108WH P90
108WSLP P91
651AA P92
651HS P93
651JS P94
651KS22; 651KSGS P95
651KS66 ..... P96
651KSBC; 651KSBCUN P97
651TA; 651TAUN P98

Canister & Disk Load Cells
106BH P99
106CS; 106CS20 ..... P100
106ES P101
106HS P102
106HSCP P103
106KS P104
106MS-F-YZ P105
106RS P106
106RS-FB P107
106TS P108
106PS; 106PS20 ..... P110
266AA; 266AH P111
266AS P114
266ASPT P115
276EH P116
363HHAN P117
363YH P118

Planar Load Cells
202UA P120
202WA P121
202WH P122

Load Pins
535TS P123

Tension Links
110BH P124
110ZHBL P125
110ES-WL-HP P126
110RH-WL P127
110RH; 110RH-ST P128

FORCE MEASUREMENT
101AALS; 101ASLS P130
101RS P131
101RSLS P132
107CH P133
112BA P134
247ASLL P135
247AA; 247AS P136
247ASLH; 247ASLHUN P137
247BS P138
247BSWM P139

© 2025 ANYLOAD V1 dimensions and specifications subject to change without notice

Table of Content

FORCE MEASUREMENT
296AS P140

WEIGH MODULES
101BHM2 ..... P142
101NHM3 ..... P143
101NHM2 ..... P144
MK4-101NHM2 ..... P145
102BHM1 ..... P146
102BSM5 ..... P147
102DHM3 ..... P148
102DSM3 ..... P149
102EHM2 ..... P150
MK4-102EHM2 ..... P151
102ESM2 ..... P152
102THM5 ..... P153
106MHM1 ..... P154
110BHM3 ..... P155
276EHM1 ..... P156
MK4-363TSM1 ..... P157
363TSM1 ..... P158
563RSM5 ..... P160
MK4-563RSM5 ..... P161
563YHM4-02 ..... P162
MK4-563YHM4 ..... P163
563YHM2 ..... P164
563YSM3-02 ..... P165
535AHM2 ..... P166

AMPLIFIERS
A1A P168
A1A-D25 ..... P169
A2A P170
A2P P171

JUNCTION BOXES
J02S-23-MB P173
J04EA-16;J04SA-16 ..... P174
J04ES; J04SS P175
J04ES-E; J04SS-E P176
J04ES-FS; J04SS-FS P177
J04EP-E; J04SP-E P178
J06ES; J06SS P179
J06S-E-21-MB P180
J08ES; J08SS P181
J08EP-E; J08SP-E. P182
J12ES; J12SS P183

INDICATORS & REMOTE DISPLAYS
808AH Remote Display P185
808BH Remote Display P186
808CH Remote Display P187
805BS Weighing Indicator P188
805TS Weighing Indicator P189
815BS Weighing Indicator P190
815TS Weighing Indicator P191
805HP Weighing Indicator P192
805HP-WL Weighing Indicator P193

OTHER INSTRUMENTS
LA Lightning Arrester P195
TMA-108B Compression Test Mount P196
WL900 Wireless RF Transmitter / Receiver P197

CABLE, CONNECTORS & ACCESSORIES
CA Cable Armor & End Fitting P199
CB12 Load Cell Cable P199
CB4 Load Cell Cable P200
CB4RP Load Cell Cable P200

CABLE, CONNECTORS & ACCESSORIES
CB6 Load Cell Cable P201
CB6RP Load Cell Cable P201
CB7AP Load Cell Cable P202
CSK Cable Splicing Kit P203
CCP Cable Connector P204
CCS Cable Connector P205

BENCH SCALE PLATFORMS
TN P207
TNS P208

FLOOR SCALE PLATFORMS & HARDWARES
FSP-TA Floor Scale P210
FSP-HD; FSP-GH Floor Scale P211
FSP; FSP-GI Floor Scale P212
FSP-SS-S4 Floor Scale P214
RAMP-17 Floor Scale Ramp P215
BG Bumper Guard P216
QS1 Quadro Set 1 ..... P217
QS3; QS5 Quadro Set 3;Quadro Set 5 ..... P218
QS3-S4; QS5-S4 Quadro Set 3;Quadro Set 5 ..... P219
AMF-F Active Mounting Foot P220
FMF Fixed Mounting Foot P220
AMFS4-F Active Mounting Foot P221
FMFS4 Fixed Mounting Foot P221
AMFSS-F Active Mounting Foot P222
FMFSS Fixed Mounting Foot P222
SBMP Scale Base Mounting Plate P223
SPACER; SPACERSS Load Cell Spacer P224

LOAD BARS
LB100 ..... P226
LB100-FP1 ..... P227

SHACKLES, EYEBOLTS, ROD END
EYE; EYH Eye Bolt P229
RE; REH Rod End P230
RBXS Shackle P231
SBX Shackle P232
TBX Shackle P233

TEST WEIGHTS
TWS P235
TWC P235
TWC-MC P236

APPENDICIES
Load cells & Modules naming system P238
Suggested Rod End or Eye Bolt for 101 Series P239
Products Gross Weights P240
Interchangeable Products P245
Product Datasheet Disclaimer P248
Special Requirements P249

© 2025 ANYLOAD V1 dimensions and specifications subject to change without notice

SINGLE ENDED BEAM LOAD CELLS

INTERCHANGEABLE

P19

563FSAS

Stainless Steel
2.5Klb
Protection Class: IP66

P20

563RS

Stainless Steel
5; 10; 20; 30; 50; 100; 200; 350; 500kg
Protection Class: IP68

Cardinal: CB6
Coti: CG-Z6
Flintec: SB8
HBM: Z6
Mettler-Toledo: MTB
Rice Lake: RLHBB/RL9018SS
Celtron: HBB
Revere: SHB
Tedea: 355

P21

563SH

Alloy Steel
25; 50; 100; 150; 200; 250; 500lb
Protection Class: IP65

Artech: 50210
Rice Lake: RL50210
Revere: 5503
Sensortronics: 60040

P22

563SHBB

Alloy Steel
50; 100; 200; 250; 500lb; 1K; 2.5Klb
Protection Class: IP65

Artech: 40310
Fairbanks: 3-481XX-1/
3-48660-1
HBM: BBS
Rice Lake: RL40BBS
Sensortronics: 65087

P24

563WS; 563WS30

Stainless Steel
1.25K; 2.5K; 5K; 10K; 25K; 37.5K; 50K
60K; 75Klb
Protection Class: IP67

Avery Weigh-
Tronix: Weigh Bar /27173 /50104 /
55829 /AWT27-500080
Coti: CG-WB-SS/
CG-WB-SS-50Klb-27173/
CG-WB-SS-50Klb-50104/
CG-WB-SS-60Klb-55829/
CG-WB-SS-75Klb-EZPOST
Rice Lake: RL75000SS
RL32011WB-L

P23

563WS-WBL

Stainless Steel
1.25Klb
Protection Class: IP67

Avery Weigh-Tronix: Weigh Bar
Coti: CG-WBL-SS-1.25Klb
Rice Lake: RL32011WB-T-1.25Klb

P26

563YA

Aluminum
200; 300lb
Protection Class: IP67

Tedea: 3310

P27

563YH

Alloy Steel
100; 200; 300; 500; 750kg; 1t; 1.5t; 2t; 2.5t;
3t; 5t; 10t; 20t/ 100; 250; 500lb; 1K; 1.5K;
2K; 2.5K; LE2.5K; 4K; SE5K; 5K; 10K; 15K;
20Klb
Protection Class: IP66/IP67

Artech: 30310
CAS:BSA
Coti: CG-23
Rice Lake: RL30000/RL32018
RL35023
Celtron: SQB
Revere: 5123
Sensortronics: 65023A
Tedea: 3411

P28

563YH-23

Alloy Steel
250; 500lb; 750lb; 1K; 1.5K; 2K; 2.5K; 3K;
4K; SE5K; 5K; 10K; 15K; 20Klb
Protection Class: IP67

Artech: 30310
Coti: CG-23
Rice Lake: RL30000/RL32018
RL35023
Celtron: SQB
Revere: 5123
Sensortronics: 65023A
Tedea: 3411

P30

563YHFK

Alloy Steel
125; 250; 500kg; 1t; 2.5t; 5t; 10t
Protection Class: IP66/IP67

Kelba: KA

P31

563YHMS

Alloy Steel
1K; 3K; 5K; 10K; 20Klb
Protection Class: IP67

Coti: CG-SB2L/SB2M,
CG-743
Mettler-Toledo:
Masstron ML4311~4449/0743
Rice Lake: RLSB2MLW/
RLSB2L

© 2025 ANYLOAD V1 dimensions and specifications subject to change without notice

SINGLE ENDED BEAM LOAD CELLS

INTERCHANGEABLE

P32

563YHRT

Alloy Steel
1K; 2.5K; 4K; 5K; 10Klb
Protection Class: IP67

Artech: 30410
Coti: CG-30410
Revere: 5723

P29

563YS; 563YS30

Stainless Steel
250; 500kg; 1t; 2t; 3t; 5t; 10t/ 500lb;
1K; 2.5K; 4K; SE5K; 5K; 10K; 15K; 20Klb
Protection Class: IP68

563YS: Coti: CG-23-SSW-02
Rice Lake: RL35082/RLHTO
Sensortronics: 65083S
Tedea: 3510-kg
563YS30: Artech: SS30310
Coti: CG-23-SSW-03
HBM: B35/H35
Mettler-Toledo: 0793
Rice Lake: RL32018S/RL32018S-HE/RL35083/
RL39123/RL35023S
Celtron: SQB-HSS
Revere: 9123
Sensortronics: 65023S/65023SS/65083
Tedea: 3510-lbs

P33

563YSBK; 563YSBKUN

Stainless Steel
200; 500kg; 1t; 2t
Protection Class: IP67

Flintec: BK2

P34

563YSLB

Stainless Steel
500lb; 1K; 2.5Klb
Protection Class: IP67

Cardinal: LFB
Coti: CG-HMT

P35

563YSLF

Stainless Steel
1.5K; 2.5K; 5Klb
Protection Class: IP67

Coti: CG-BLF
HBM: BLF
Fairbanks: 3-53581-X/
3-52921-1

P36

563YSMT

Stainless Steel
250; 500lb; 1.25K; 2.5K; 4K; 5K; 10Klb
Protection Class: IP66/IP68

Coti: CG-745
HBM: THC
Mettler-Toledo: MT0744
MT0745A
Rice Lake: RL30745

P37

563YSMT-4

Stainless Steel
5; 10; 20; 50; 100kN
Protection Class: IP66/IP68

Flintec: SB4

P38

563YSRS

Stainless Steel
1K; 2K; 5Klb
Protection Class: IP68

Artech: SS30610
Coti: CG-SB3
HBM: SB3
Rice Lake: RLSSB
Revere: SSB

P39

563YSSB

Stainless Steel
2.5K; 5K; 10K; 20Klb
Protection Class: IP68

Cardinal: SB
Coti: CG-SB250
Rice Lake: RLSB250

DOUBLE ENDED BEAM LOAD CELLS

INTERCHANGEABLE

P40

102AH

Alloy Steel
5t; 10t; 15t; 20t; 25t; 30t; 50t
Protection Class: IP67

© 2025 ANYLOAD V1 dimensions and specifications subject to change without notice

DOUBLE ENDED BEAM LOAD CELLS

			INTERCHANGEABLE
P41	102BH	Alloy Steel 5t; 10t; 15t; 20t; 25t; 30t; 35t; 50t/ 10K; 20K; 25K; 40K; 50K; 60K; 75K; SE100K; 100K; 125K; 200K; 300K; 400Klb Protection Class: IP67 RoHS	Artech: 70310 Coti: CG-58 Rice Lake: RL75058 Celtron: CLB Revere: 5303 Sensortronics: 65058A Tedea: 4158
P42	102BS	Stainless Steel 10K; 20K; 25K; 50K; 60K; 75Klb Protection Class: IP68 RoHS	Artech: SS70310 Coti: CG-58-SSW Rice Lake: RL75060S Revere: 9303 Sensortronics: 65058S
P44	102DH	Alloy Steel 5K; 10K; 15K; 20K; 30K; 40K; 50K; 60K; 75K; 100K; 150K; 200Klb Protection Class: IP67 RoHS	Artech: 70210 Coti: CG-5103 Rice Lake: RL70000 /RL72020 Mettler Toledo: SLD430 Revere: 5103 Sensortronics: 60058
P45	102DS	Stainless Steel Welded Seal 5K; 10K; 15K; 20K; 30K; 40K; 50K; 60K; 75K; 100K; 150K; 200Klb Protection Class: IP68 RoHS	Artech: SS70210 Coti: CG-5103-SSW Mettler Toledo: SLD-530 Rice Lake: RL70000SS /RL72019SS /RL72020SS Revere: 9103
P46	102EH	Alloy Steel 1K; 1.5K; 2.5K; 5K; 10K; 15K; 20K; 25K; 35K; 50K; 60K; 75K; 100K; 125K; 200K; 300Klb Protection Class: IP67 RoHS	Artech: 70510 Coti: CG-16 Rice Lake: RL75016 Mettler Toledo: SLD425 Celtron: DSR Revere: 5203 Sensortronics: 65016
P43	102EHEL	Alloy Steel 40K; 50Klb Protection Class: IP67 RoHS	Coti: CG-STR Epelsa: STR
P47	102ES	Stainless Steel 2.5K; 5K; 10K; 15K; 25K; 35K; 50K; 60K; 75Klb Protection Class: IP68 RoHS	Artech: SS70510 Coti: CG-16-SSW Rice Lake: RL75016SS/RL75016WHE Mettler Toledo: SLD525 Celtron: DSR-SS Revere: 9203 Sensortronics: 65016W/65016WH
P48	102FS	Stainless Steel 50K; 75Klb Protection Class: IP68 RoHS	Cardinal: DB50000S/ DB75000S Coti: CG-DB50000S Rice Lake: RLDB50000S/ RLDB75000S
P50	102MH	Alloy Steel 25t Protection Class: IP67 RoHS	
P51	102MHML	Alloy Steel 25Klb Protection Class: IP67 RoHS	Coti: CG-SLS Massload: ML1100
P52	102RH	Alloy Steel 10t; 15t/ 50K; 65K; 75K; 100K; 125Klb Protection Class: IP68 RoHS	Artech: 80210 Coti: CG-5223 Rice Lake: RL75223 Revere: 5223 Sensortronics: 65040-1127W

© 2025 ANYLOAD V1 dimensions and specifications subject to change without notice

DOUBLE ENDED BEAM LOAD CELLS

			INTERCHANGEABLE
P53	102RHGT	Alloy Steel 60Klb Protection Class: IP68 RoHS	BIM: SDB60Klb
P49	102TH	Alloy Steel 25K; 40K; SE50K; 50K; SE60K; 60K; SE75K; 75K; 100K; 125Klb Protection Class: IP67 RoHS	Artech: 80310 Coti: CG-BE40 Rice Lake: RL75040 Celtron: DLB Revere: 9323/9903 Sensortronics: 65040A

S-BEAM LOAD CELLS

			INTERCHANGEABLE
P54	101AH	Alloy Steel 1; 2; 3; 5; 10; 20; 30kg Protection Class: IP65 RoHS	
P56	101BH	Alloy Steel 50; 100; 200; 300; 500kg; 1t; SE2t; 2t; 3t; 5t; 10t Protection Class: IP66/IP67 RoHS	Tedea: 615
P57	101BS	Stainless Steel 300; 500kg; 1t; 2t; 3t; 5t; 10t/ 500lb; 1K; 1.5K; 2K; 2.5K; 3K; 5K; 10K; 15K; 20Klb Protection Class: IP68 RoHS	Coti: CGSB-SSW Flintec: ULB HBM: RSC Rice Lake: RL20001HE Celtron: STC HSS Sensortronics: 60063 Tedea: 616/620
P58	101NH	Alloy Steel 50; 100; 200; 250; 300; 500; 750lb; 1K; 1.5K; 2K; 2.5K; 3K; 5K; 10K; 15K; 20Klb Protection Class: IP66/IP67 RoHS	Artech: 20210 Coti: CGSB/CGSB-1 Rice Lake: RL20000/RL20001 Celtron: STC Revere: 363 Sensortronics: 60001
P59	101NH-LE	Alloy Steel 5K; 10Klb Protection Class: IP67 RoHS	Sensortronics: 60001 Rice Lake: 20001 Vishay Celtron: STC
P55	101NSGS	Stainless Steel 50; 100; 250; 500lb; 1K; 1.5K; 2K; 2.5K; 3K; 5K; 10K; 15K; 20Klb Protection Class: IP66/IP67 RoHS	Artech: SS20210 Coti: CGSB-SS Rice Lake: RL20000 SS RL20000 ST Celtron: STC-SS Revere: 9363 Sensortronics: 60050

SINGLE POINT LOAD CELLS

			INTERCHANGEABLE
P60	108AA	Aluminum 0.1; 0.2; 0.3; 0.5; 1; 2; 3; 5kg Max. Platform Size: 200×200 / 230×230mm Protection Class: IP66 RoHS	

© 2025 ANYLOAD V1 dimensions and specifications subject to change without notice

SINGLE POINT LOAD CELLS

			INTERCHANGEABLE
P61	108AA3MUN	Aluminum 3; 5; 10; 15; 20; 30; 50; 90kg Max. Platform Size: 350×350 mm Protection Class: IP66 RoHS	Vishay Tedea-Huntleigh: 1010 / 1015
P62	108BA	Aluminum 3; 6; 7; 10; 15; 20; 30; 35; 40; 50; 60; 75; 100; 150kg Max. Platform Size: 400×400mm Protection Class: IP66 RoHS	HBM: PW6C/PW6K Mettler-Toledo: MT1022 Flintec: PC22 Rice Lake: RL1521A Celtron: LPS ME 6-35kg Tedea: 1022
P63	108BATD	Aluminum 3; 5; 7; 10; 15; 20; 30; 50; 100kg Max. Platform Size: 350×350mm Protection Class: IP66 RoHS	Vishay Tedea-Huntleigh: 1030
P64	108CA	Aluminum 10; 20; 30; 60; 100; 150; 200; 250; 300; 500; 600; 750kg; 1t Max. Platform Size: 600×700mm Protection Class: IP66 RoHS	Coti: CG-50-2 HBM: PW24A Tedea: 1263
P66	108DA	Aluminum 500; 800kg; 1t; 1.5t; 2t Max. Platform Size: 1200×1200mm Protection Class: IP66 RoHS	Celtron: HOC Tedea: 1320 Flintec: Pc81
P67	108EA	Aluminum 30; 60; 100; 150; 200; 300kg Max. Platform Size: 450×450mm Protection Class: IP66 RoHS	
P68	108HAUN	Aluminum 50; 100; 250; 635kg; 1t Max. Platform Size: 550×600mm Protection Class: IP66 RoHS	
P69	108JA; 108JA-21	Aluminum 108JA: 20; 50; 60; LE60; 75; LE75; 100; LE100; 150; SE150; SE200; 200; SE300; 300; SE400; 400; 500; SE600; 750kg; 1t; 1.5t; 2t, 108JA-21: 30; 50; 75; 100; 150kg Max. Platform Size: 108JA: 20-100kg: 460×600mm 150-400kg: 600×600mm 500kg-2t: 900×900mm 108JA-21: 500 ×500mm Protection Class: IP66 RoHS	108JA-21: Vishay-Tedea Huntliegh: 1242 Mettler-Toledo: MT1241
P72	108KS; 108KSUN	Stainless Steel 4; 7; 10; 15; 20; 30; 50; 75; 100; 150kg Max. Platform Size: 400×400mm Protection Class: IP66 RoHS	108KS: Flintec: PC30 Tedea: 1130 (mounting hole: M6) 108KSUN: Coti: CG-1130 Avery Weigh-Tronix: MK29 Tedea: 1130 (mounting hole: 1/4"-20UNC)
P70	108LAMT	Stainless Steel 30; 50; 60; 100; 150; 200; 300kg Max. Platform Size: 500×500mm Protection Class: IP66 RoHS	Mettler-Toledo: MT1241

© 2025 ANYLOAD V1 dimensions and specifications subject to change without notice

SINGLE POINT LOAD CELLS

			INTERCHANGEABLE
P71	108LSMT	Stainless Steel 30; 50; 100; 200; 300kg Max. Platform Size: 500×500mm Protection Class: IP66 RoHS	Mettler-Toledo: SSP1241
P74	108MA; 108MAUN	Aluminum 50; 75; 100; 150; 200; 250; 300; 500; 635; 660; 1000kg Max. Platform Size: 610×700mm Protection Class: IP66 RoHS	108MA: Mettler-Toledo: MT1260 108MAUN: Coti: CG-50-1 HBM: PW16 Rice Lake: RL1260 /RL26018A / RLPWM16 Tedea: 1260
P78	108PA	Aluminum 0.2; 0.3; 0.6; 1; 2; 3; 6kg Max. Platform Size: 200×200 / 230×230mm Protection Class: IP66 RoHS	HBM: SPL Tedea: 1004
P76	108QS	Stainless Steel 6; 10; 15; 25; 50; 100; 200; 500lb; 1Klb Max. Platform Size: 6 lb-100 lb: 400×450mm 200 lb: 500×550mm 500 lb; 1Klb: 650×700mm Protection Class: IP66 RoHS	Cardinal: SP Coti: CG-SPL/CG-SPLM
P77	108QSFL	Stainless Steel 250lb Max. Platform Size: 400×450mm Protection Class: IP66 RoHS	Avery Weigh-Tronix: FLS Rice Lake: RLFLS
P79	108SA	Aluminum 6; 10; 15; 20; 30kg Max. Platform Size: 250×250mm Protection Class: IP66 RoHS	
P82	108TA; 108TAUN	Aluminum 3; 5; 7; 10; 15; 20; 30; 50; 75; 100; 150; 200kg Max. Platform Size: 400×450mm Protection Class: IP66 RoHS	108TA: Flintec: PC42 (20~150kg) Revere: 642C Tedea: 1042 108TAUN: Cardinal: TSP Coti: CG-42 HBM: SP4 Rice Lake: RL1042/ RLSP4 / RL42018A Revere: 642 Tedea: 1042
P84	108TAAD	Aluminum 30; 60; 150kg Max. Platform Size: 400×400mm Protection Class: IP66 RoHS	A&D: LC-4102
P85	108TAAL	Aluminum 30; 60; 100; 150kg Max. Platform Size: 400×400mm Protection Class: IP66 RoHS	A&D: LC-4103
P81	108TAYM; 108TAYM-01	Aluminum 75; 150; 300kg Max. Platform Size: 400×400mm Protection Class: IP66 RoHS	Yamato: UH69

© 2025 ANYLOAD V1 dimensions and specifications subject to change without notice

SINGLE POINT LOAD CELLS

			INTERCHANGEABLE
P86	108TS; 108TSUN	Stainless Steel 5; 10; 15; 20; 30; 50; 75; 100; 150kg Max. Platform Size: 450×500mm Protection Class: IP66 CE ATEX FM RoHS	108TS: Cardinal: TSSP Flintec: PC1 (30-100kg) HBM: PW15A Tedea: 1142 108TSUN: HBM:PW15 Rice Lake: RL1140/RL1385 Tedea: 1140
P87	108TSLL	Stainless Steel 7; 10; 15; 30; 60; 100; 150kg Max. Platform Size: 400×400mm Protection Class: IP66 CE ATEX FM RoHS	Coti: CG-PWS HBM: PWS Rice Lake: RL1380
P88	108TSST	Stainless Steel 10; 15; 25; 50; 100lb Max. Platform Size: 10; 15; 25lb: 200×250mm 50; 100lb: 300×300mm Protection Class: IP66 CE ATEX FM RoHS	Coti: CG-51 Sensortronics: 60051
P89	108TSVS	Stainless Steel 50; 100; 200; 400; 500lb; 1Klb Max. Platform Size: 50-500lb: 500×500mm 1Klb: 750×750mm Protection Class: IP66 CE ATEX FM RoHS	Coti: CG-60048 Sensortronics: 60048
P80	108UA; 108UAUN	Aluminum 30; 50; 100; 150; 200; 300; 500; 635; 700kg; 1; 1.5t Max. Platform Size: 750×750mm Protection Class: IP66 CE ATEX FM RoHS	108UA: Cardinal: CHB 108UAUN: Anyload: 651BAUN Rice Lake: RL1250 / RL1218A Celtron: LOC Coti: CG-50 Revere: 652 Sensortronics: 60060 Flintec: PCB Tedea: 1250 HBM: PW12/PW12B
P90	108WH	Alloy Steel 300; 400; 500; 750kg; 1t Max. Platform Size: 600×700mm Protection Class: IP66 CE ATEX FM RoHS	
P91	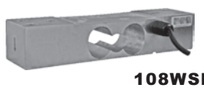 108WSLP	Stainless Steel 150kg Max. Platform Size: 400×400mm Protection Class: IP66 CE ATEX FM RoHS	Mettler-Toledo: 0756
P92	651AA	Aluminum 10; 15; 30; 50; 100kg Max. Platform Size: 400×400mm Protection Class: IP66 CE ATEX FM RoHS	Coti: CG-1010 HBM: SP10 Rice Lake: RL1010 Tedea: 1010/1015
P93	651HS	Stainless Steel 6; 12; 20; 30; 50; 60kg Max. Platform Size: 350×350mm Protection Class: IP68/IP69K CE ATEX FM RoHS	Revere: HPSM
P94	651JS	Stainless Steel 50; 75; 200; 400kg Max. Platform Size: 600×600mm Protection Class: IP68/IP69K CE ATEX FM RoHS	Anyload: 108JA

© 2025 ANYLOAD V1 dimensions and specifications subject to change without notice

SINGLE POINT LOAD CELLS

			INTERCHANGEABLE
P95	651KS22; 651KSGS	Stainless Steel 50; 100; 250; 500kg Max. Platform Size: 600×600mm Protection Class: IP68/IP69K/IP66 CE ATEX FM RoHS	651KS22: Flintec: PC7 Mettler-Toledo: SSH Tedea: 1510
P73	651KS55UN	Stainless Steel 50; 75; 100; 150; 200; 250; 300; 500kg Max. Platform Size: 610×700mm Protection Class: IP68 CE ATEX FM RoHS	Coti: CG-50-1 HBM: PW16 Rice Lake: RL1260 Tedea: 1260
P96	651KS66	Stainless Steel LE10kg;LE20kg;LE50kg;LE100kg;LE200kg Max. Platform Size: 610×700mm Protection Class: IP68/IP69K CE ATEX FM RoHS	Flintec: PC6
P97	651KSBC; 651KSBCUN	Stainless Steel 100; 250; 500kg Max. Platform Size: 800×800mm Protection Class: IP68/IP69K CE ATEX FM RoHS	651KSBC: Flintec: PCB 651KSBCUN: Flintec: PCB Rice Lake: RLPCBC-60
P65	651KSCS	Stainless Steel 60; 100; 150; 200; 250; 300; 500; 600; 750kg; 1t Max. Platform Size: 600×700mm Protection Class: IP68 CE ATEX FM RoHS	
P98	651TA; 651TAUN	Aluminum 10; 15; 20; 30; 50; 75; 100; 200kg Max. Platform Size: 450×500mm Protection Class: IP66 CE ATEX FM RoHS	651TA: Mettler-Toledo: MT1041 Tedea: 1040/1041 651TAUN: Celtron: LOC Coti: CG-40 Rice Lake: RL1040 Tedea: 1040/1041

CANISTER & DISK LOAD CELLS

			INTERCHANGEABLE
P99	106BH	Alloy Steel 100; 200; 300; 500; 800; 1000t Protection Class: IP67 CE ATEX FM RoHS	
P100	106CS; 106CS20	Stainless Steel 10; 15; 25; 40; 50; 100t / 10K; 25K; 50K; 100K; 200Klb Protection Class: IP68 CE ATEX FM RoHS	106CS: Cardinal: CP1 Coti: CG-175 Revere: CP/392B 106CS20: Coti: CG-26S5 Rice Lake: RLCSP1 Revere: CSP/692B
P101	106ES	Stainless Steel 50K; 100Klb Protection Class: IP68 CE ATEX FM RoHS	Cardinal: SCA Coti: CG-26S

© 2025 ANYLOAD V1 dimensions and specifications subject to change without notice

CANISTER & DISK LOAD CELLS

			INTERCHANGEABLE
P102	106HS	Stainless Steel 20; 30; 40t Protection Class: IP68 RoHS	Coti: CG-26S4 HBM: C16 Revere: ASC
P103	106HSCP	Stainless Steel 35t Protection Class: IP68 RoHS	Bilanciai: CPR-M
P104	106KS	Stainless Steel 50K; 100Klb Protection Class: IP68 RoHS	Coti: CG-CC22 Mettler-Toledo: B10883600A B10887700A Totalcomp: T752
P105	106MS-F-YZ	Stainless Steel 500kg; 1t; 2t; 5t; 10t; 1K; 2.5K; 5K; 10K; 20Klb Protection Class: IP67 RoHS	
P110	106PS; 106PS20	Stainless Steel 50K; 100Klb Protection Class: IP68 RoHS	106PS: Coti: CG-93 Revere: 93 106PS20: Coti: CG-92 Revere: 92
P106	106RS	Stainless Steel 30; 40; 50; 100t Protection Class: Ip68 RoHS	Coti: CG-26S6 Flintec: RC3 Fairbanks: LCF HR4020-2A(30t), part # 70510
P107	106RS-FB	Stainless Steel LE50Klb Protection Class: IP68 RoHS	Coti: CG-S1/ CG-S2-56Klb Flintec: RC1 Fairbanks: LCF HR4020-2, part # 64166/ LCFHR4020-19 Rice Lake: RL75114
P108	106TS	Stainless Steel SE30t; 30t; SE50t / 50K; 100Klb Protection Class: IP68 RoHS	Coti: CG-26S7 Mettler-Toledo: Powercell 760/ MTX 0782
P111	266AA; 266AH	Aluminum 25; 50kg Alloy Steel 100; 200; 300; 500kg; 1t; 2t; 3t; 5t; 10t; 20t; 30t Protection Class: IP66/ IP67 RoHS	
P114	266AS	Stainless Steel 100; 200; 250; 500kg; 1t; 2t; 5t; 10t; 20t; 30t Protection Class: IP68 RoHS	
P115	266ASPT	Stainless Steel 100; 250; 500kg; 1t; 2.5t; 5t; 10t; 25t; 50t Protection Class: IP68 RoHS	PT Global: LPX

© 2025 ANYLOAD V1 dimensions and specifications subject to change without notice

CANISTER & DISK LOAD CELLS

P116	276EH	Alloy Steel 5; 10; 25; 50; 100t Protection Class: IP67 RoHS
P117	363HHAN	Alloy Steel 60t Protection Class: IP67 RoHS
P118	363YH	Alloy Steel 1; 2; 3; 5; 10; 20; 30; 50; 100; 150; 200; 300t Protection Class: IP67 RoHS

PLANAR LOAD CELLS

			INTERCHANGEABLE
P120	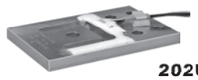 202UA	Aluminum 3.75; 7.5; 15; 37.5; 75; 150; 375kg Protection Class: IP65 RoHS	Flintec: PB Rice Lake: RL BLP
P121	202WA	Aluminum 100; 200; 300kg / 12.5; 18.75; 25; 37.5; 50; 100; 200lb Protection Class: IP65 RoHS	Flintec: PBW
P122	202WH	Alloy Steel 250kg Protection Class: IP65 RoHS	

LOAD PINS

P123	535TS	Stainless Steel 2; 5; 10; 20; 40; 70; 100t Protection Class: IP67 RoHS

TENSION LINKS

P124	110BH	Patent Design Alloy Steel 1; 2; 5; 10; 20; 30; 50; 75; 100; 120t Protection Class: IP67 RoHS

© 2025 ANYLOAD V1 dimensions and specifications subject to change without notice

TENSION LINKS

P126

110ES-WL-HP

Wireless Tension Link
Stainless Steel
1; 2.5; 5; 10; 20; 30; 50; 100t
Protection Class: IP68/IP69K
RoHS

P128

110RH; 110RH-ST

Patent Design
Alloy Steel
0.5; 1; 2; 3; 5; 10; 20; 30; 50; 100t
Protection Class: IP67
RoHS

P127

110RH-WL

Patent Design; Wireless Tension Link
Alloy Steel
0.5; 1; 2; 3; 5; 10; 20; 30; 50; 100t
1K; 2K; 4K; 5K; 10K; 20K; 40K; 60K; 100K; 200Klb
Protection Class: IP67
RoHS

P125

110ZHBL

Alloy Steel
1.5; 2.5t; 2.5Klb
Protection Class: IP67
RoHS

FORCE MEASUREMENT

P130

101AALS; 101ASLS

Aluminum / Stainless Steel
2.2; 5; 10 ; 25; 50; 100; 200; 300; 500lb
Protection Class: IP30
RoHS

P131

101RS

Stainless Steel
100N; 250N; 500N; 750N
Protection Class: IP66
RoHS

P132

101RSLS

Stainless Steel
250g; 1lb; 2lb; 5lb; 10lb; 25lb; 50lb; 100lb
Protection Class: IP40
RoHS

P133

107CH

Alloy Steel
10; 20; 50; 100; 200kN
Protection Class: IP67
RoHS

P134

112BA

Aluminum
20in-oz; 50in-oz; 12in-lb; 50in-lb; 100in-lb;
0.14Nm; 0.35Nm; 1.5Nm; 5.6Nm; 11.3Nm
Protection Class: IP65
RoHS

© 2025 ANYLOAD V1 dimensions and specifications subject to change without notice

FORCE MEASUREMENT

P136

247AA; 247AS

Aluminum
1; 2; 5; 10; 20kg
Stainless Steel
30; 50; 100; 150; 200; 500kg; 1t; 5t
Protection Class: IP66
RoHS

P137

247ASLH; 247ASLHUN

Stainless Steel
247ASLH:
10; 25; 50; 100; 250; 500kg; 1t; 2t; 5t;10t
247ASLHUN:
250; 500kg; 1t; 2t; 5t;10t
Protection Class: IP66
RoHS

P135

247ASLL

Stainless Steel
5; 10Klb
Protection Class: IP64
RoHS

P138

247BS

Stainless Steel
30; 50; 100kg
Protection Class: IP66
RoHS

P139

247BSWM

Stainless Steel
10; 25; 50; 100; 250; 500lb; 1; 2; 3; 5; 7.5; 10Klb
Protection Class: IP66
RoHS

P140

296AS

Stainless Steel
50; 100; 500N; 5; 20; 50; 100; 200kN
Protection Class: IP66
RoHS

© 2025 ANYLOAD V1 dimensions and specifications subject to change without notice

LOAD CELLS

ANYLOAD

ANYLOAD

563FSAS

Stainless Steel

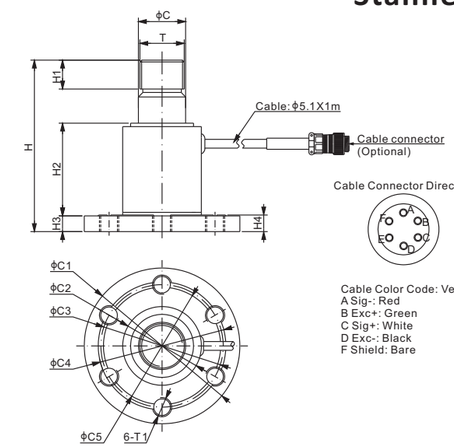

Cable Color Code: Version B
A Sig-: Red
B Exc+: Green
C Sig+: White
D Exc-: Black
F Shield: Bare

DIMENSIONS

RATED CAPACITY	C	C1	C2	C3	C4	C5	H	H1	H2	H3	H4	T	T1
Klb/inches													
2.5	1.06	3.50	1.77	2.76	2.64	2.87	3.86	0.65	2.09	0.35	0.37	1-14 UNS-2A	7/16-14 UNC-2B
kg/mm (conversion of above dimensions)													
1,134	27.0	89.0	45.0	70.0	67.0	73.0	98.0	16.5	53.0	9.0	9.5	1-14 UNS-2A	7/16-14 UNC-2B

SPECIFICATIONS

Full Scale Output	0.4 mV/V ± 0.25%	**Recommended Excitation**	10V (15V Maximum)
Zero Balance	± 0.02 mV/V	**Insulation Resistance**	>2［50V DC］GΩ
Non-linearity	< ± 0.017%	**Compensated Temperature Range**	-10°C to 50°C / 14°F to 122°F
Repeatability	< ± 0.017%	**Safe Overload**	200% of full scale
Hysteresis Error	< ± 0.017%	**Breaking Overload**	500% of full scale
Creep in 30 min.	< ± 0.023%	**Seal Type / IP Rating**	Environmentally Sealed / IP66
Input Resistance	1100Ω ± 50	**Cable Color Code**	Two versions, check part number block for detail
Output Resistance	1000Ω ± 10		
Element Material	2Cr13 Stainless Steel		

PART NUMBER

Cable color code version A, No cable connector:
Exc+: Red, Exc-: Black, Sig+: Green, Sig-: White;
Shield: Bare

Rated Capacity	Part No.	Weight (kg) Approx.
2.5Klb	563FSAS-2.5Klb-YZ	1.1

Cable color code version B:
Exc+: Green, Exc-: Black, Sig+: White, Sig-: Red;
Shield: Bare

Rated Capacity	Cable Connector	Part No.	Weight (kg) Approx.
2.5Klb	No	563FSAS-2.5Klb-YZ-B	1.1
2.5Klb	Yes	563FSAS-2.5Klb-YZ-C	1.1

* ATEX, FM, IECEx approved versions carry the "-Ex" suffix.

APPLICATION EXAMPLES

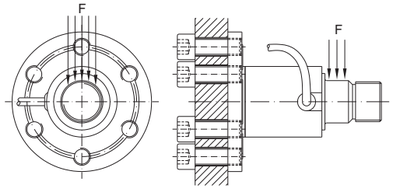

© 2025 ANYLOAD V1 dimensions and specifications subject to change without notice

563RS

ANYLOAD

Stainless Steel

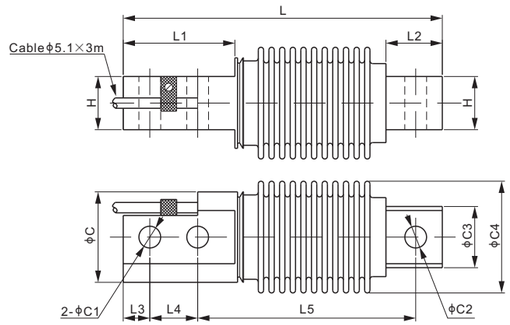

DIMENSIONS

RATED CAPACITY	C	C1	C2	C3	C4	L	L1	L2	L3	L4	L5	H
kg/mm												
5–200	34.0	8.2	8.2	23.0	42.0	120.0	42.0	21.2	10.0	18.0	82.0	20.0
350–500	34.0	8.2	10.5	23.0	42.0	120.0	42.0	21.2	10.0	18.0	82.0	20.0
500(23A)	34.0	10.5	10.5	23.0	42.0	120.0	42.0	21.2	10.0	18.0	82.0	20.0
lb/inches (conversion of above dimensions)												
11.02–440.92	1.34	0.32	0.32	0.91	1.65	4.72	1.65	0.83	0.39	0.71	3.23	0.79
771.62–1,102.31	1.34	0.32	0.41	0.91	1.65	4.72	1.65	0.83	0.39	0.71	3.23	0.79
1,102.31(23A)	1.34	0.41	0.41	0.91	1.65	4.72	1.65	0.83	0.39	0.71	3.23	0.79

SPECIFICATIONS

Full Scale Output	2.0 mV/V ± 0.25%	**Element Material**	17-4PH Stainless Steel
Zero Balance	Cap.≤20kg: ± 0.05 mV/V Cap.>20kg: ± 0.02 mV/V	**Recommended Excitation**	10V (15V Maximum)
		Insulation Resistance	>2 [50V DC] GΩ
Deflection at Emax	0.27 - 0.33mm	**Compensated Temperature Range**	-10°C to 50°C / 14°F to 122°F
Non-linearity	< ± 0.017%	**Safe Overload**	150% of full scale
Repeatability	< ± 0.017%	**Breaking Overload**	300% of full scale
Hysteresis Error	< ± 0.017%	**Seal Type / IP Rating**	Welded Seal / IP68
Creep in 30 min.	< ± 0.023%	**Cable Color Code**	Exc+ Red Exc- Black Sig+ Green Sig- White Shield Bare
Input Resistance	400Ω ± 20		
Output Resistance	350Ω ± 3		

PART NUMBER*

Rated Capacity	Part No.	Weight Approx. (kg)
5kg	563RS-5kg	0.6
10kg	563RS-10kg	0.6
20kg	563RS-20kg	0.6
30kg	563RS-30kg	0.6
50kg	563RS-50kg	0.6
100kg	563RS-100kg	0.6
200kg	563RS-200kg	0.6
350kg	563RS-350kg	0.6
500kg	563RS-500kg	0.6
	563RS-500kg-23A	0.6

* ATEX, FM, IECEx approved versions carry the "-Ex" suffix.

5kg-50kg: NTEP 1:6 000 Class III, Single Cell;
NTEP 1:10 000 Class III, Multiple Cell
100kg-500kg: NTEP 1:4 500 Class III, Single Cell;
NTEP 1:10 000 Class III, Multiple Cell
10kg-50kg: OIML MAA C6, Y=30 000;
100kg-500kg: OIML MAA C4, Y=30 000

For further available P/N's & specifications per NTEP/OIML classes, please contact us.

INTERCHANGEABLE REFERENCE

Brand	Model
Cardinal	CB6
Coti Global	CG-Z6
Flintec	SB8
HBM	Z6*
Mettler-Toledo	MTB*
Rice Lake	RLHBB
Rice Lake	RL9018SS
Vishay Celtron	HBB
Vishay Revere Transducers	SHB
Vishay Tedea-Huntleigh	355

** Except 500kg. Use 563RS-500kg-23A instead since C1 of 500kg of HBM Z6 and Mettler Toledo MTB: 10.5mm*

WEIGH MODULE

Model	Page
563RSM5	160

© 2025 ANYLOAD V1 dimensions and specifications subject to change without notice

ANYLOAD

563SH

Alloy Steel

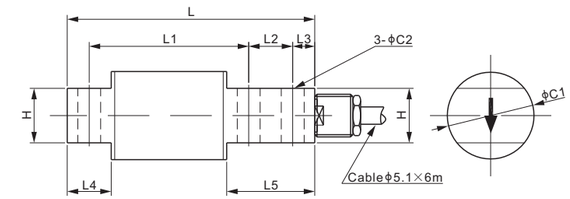

DIMENSIONS

RATED CAPACITY	C1	C2	H	L	L1	L2	L3	L4	L5
lb/inches									
25–500	1.30	0.26	0.62	2.81	1.81	0.50	0.25	0.50	1.00
kg/mm (conversion of above dimensions)									
11.34–226.8	33.0	6.6	15.7	71.4	46.0	12.7	6.35	12.7	25.4

SPECIFICATIONS

Full Scale Output	3.0 mV/V ± 10%	**Recommended Excitation**	10V (15V Maximum)
Zero Balance	± 0.02 mV/V	**Insulation Resistance**	>2 [50V DC] GΩ
Combine error	0.03% of full scale	**Compensated Temperature Range**	-10°C to 50°C / 14°F to 122°F
Non-linearity	< ± 0.030%	**Safe Overload**	150% of full scale
Repeatability	< ± 0.020%	**Breaking Overload**	300% of full scale
Hysteresis Error	< ± 0.020%	**Seal Type / IP Rating**	Environmentally Sealed / IP65
Creep in 30 min.	< ± 0.030%	**Cable Color Code**	Exc+ Red Exc- Black Sig+ Green Sig- White Shield Bare
Input Resistance	400Ω ± 20		
Output Resistance	350Ω ± 3		
Element Material	Alloy Steel, Nickel Plated		

PART NUMBER*

Rated Capacity	Part No.	Weight Approx. (kg)
25lb	563SH-25lb	0.26
50lb	563SH-50lb	0.26
100lb	563SH-100lb	0.47
150lb	563SH-150lb	0.47
200lb	563SH-200lb	0.47
250lb	563SH-250lb	0.47
500lb	563SH-500lb	0.47

* ATEX, FM, IECEx approved versions carry the "-Ex" suffix.

INTERCHANGEABLE REFERENCE

Brand	Model
Artech	50210
Rice Lake	RL50210
Vishay Revere Transducers	5503
Vishay Sensortronics	60040

© 2025 ANYLOAD V1 dimensions and specifications subject to change without notice

563SHBB

ANYLOAD

Alloy Steel

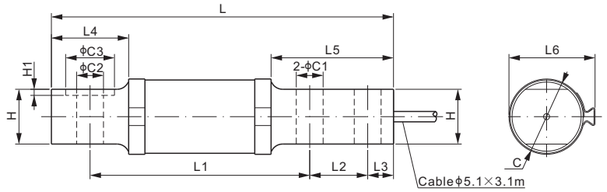

CE ATEX FM APPROVED IECEx RoHS

DIMENSIONS

RATED CAPACITY	C	C1	C2	C3	H	H1	L	L1	L2	L3	L4	L5	L6
lb/inches													
50–100	1.46	0.31	0.31	–	1.06	–	6.00	4.25	0.88	0.38	1.19	1.97	1.69
200–1,000	1.46	0.52	0.52	–	1.06	–	6.62	4.25	1.12	0.50	1.49	2.36	1.69
2,500	2.17	0.53	0.62	1.19	1.25	0.12	11.38	8.25	1.75	0.50	2.84	3.98	2.40
kg/mm (conversion of above dimensions)													
22.68–45.36	37.0	7.9	7.9	–	26.9	–	152.4	108.0	22.4	9.7	30.2	50.0	43.0
90.72–453.59	37.0	13.2	13.2	–	26.9	–	168.2	108.0	28.5	12.7	37.8	60.0	43.0
1133.98	55.0	13.5	15.8	30.3	31.8	3.0	289.1	209.6	44.5	12.7	72.1	101.0	61.0

SPECIFICATIONS

Full Scale Output	2.0 mV/V ± 0.25%	**Recommended Excitation**	10V (15V Maximum)
Zero Balance	± 0.02 mV/V	**Insulation Resistance**	>2 [50V DC] GΩ
Non-linearity	< ± 0.030%	**Compensated Temperature Range**	-10°C to 50°C / 14°F to 122°F
Repeatability	< ± 0.020%	**Safe Overload**	150% of full scale
Hysteresis Error	< ± 0.030%	**Breaking Overload**	300% of full scale
Creep in 30 min.	< ± 0.030%	**Seal Type / IP Rating**	Environmentally Sealed / IP65
Input Resistance	Cap.≤1Klb:700Ω ± 20; Cap.=2.5Klb:350Ω ± 7	**Cable Color Code**	Exc+ Red, Exc- Black, Sig+ Green, Sig- White, Shield Bare
Output Resistance	Cap.≤1Klb:700Ω ± 5; Cap.=2.5Klb:350Ω ± 3		
Element Material	Alloy Steel, Nickel Plated		

PART NUMBER*

Rated Capacity	Part No.	Weight Approx. (kg)
50lb	563SHBB-50lb	0.93
100lb	563SHBB-100lb	0.93
200lb	563SHBB-200lb	1.00
250lb	563SHBB-250lb	1.00
500lb	563SHBB-500lb	1.00
1Klb	563SHBB-1Klb	1.00
2.5Klb	563SHBB-2.5Klb	3.53

* ATEX, FM, IECEx approved versions carry the "-Ex" suffix.

INTERCHANGEABLE REFERENCE

Brand	Model
Artech	40310
Fairbanks	3-481XX-1
Fairbanks	3-48660-1
HBM	BBS
Rice Lake	RL40BBS
Vishay Sensortronics	65087

www.anyload.com
© 2025 ANYLOAD V1 dimensions and specifications subject to change without notice

ANYLOAD

563WS-WBL

Stainless Steel

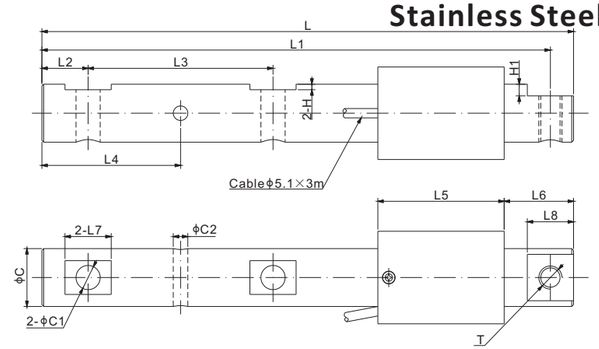

CE ATEX FM APPROVED IECEx RoHS

DIMENSIONS

RATED CAPACITY	C	C1	C2	H	H1	L	L1	L2	L3	L4	L5	L6	L7	L8	T
lb/inches															
1250	1.25	0.52	0.31	0.25	0.12	11.50	11.00	1.00	4.00	3.00	2.73	1.50	1.00	1.00	1/2–13 UNC–2B
kg/mm (conversion of above dimensions)															
567.0	31.8	13.3	8.0	6.4	3.0	292.1	279.4	25.4	101.6	76.2	69.4	38.1	25.4	25.4	1/2–13 UNC–2B

SPECIFICATIONS

Full Scale Output	2.0 mV/V ± 0.25%	**Recommended Excitation**	10V (15V Maximum)
Zero Balance	± 0.02 mV/V	**Insulation Resistance**	>2 [50V DC] GΩ
Non-linearity	< ± 0.05%	**Nominal Temperature Range**	-10°C to 50°C / 14°F to 122°F
Repeatability	< ± 0.03%	**Safe Overload**	150% of full scale
Hysteresis Error	< ± 0.05%	**Breaking Overload**	300% of full scale
Creep in 30 min.	< ± 0.03%	**Seal Type / IP Rating**	Environmentally Sealed / IP67
Input Resistance	350Ω ± 7	**Cable Color Code**	Exc+ Red, Exc- Black, Sig+ Green, Sig- White, Shield Bare
Output Resistance	350Ω ± 3		
Element Material	2Cr13 Stainless Steel		

PART NUMBER*

Rated Capacity	Part No.	Weight Approx. (kg)
1.25Klb	563WS-1.25Klb-YZ-WBL	2.25

* ATEX, FM, IECEx approved versions carry the "-Ex" suffix.

INTERCHANGEABLE PRODUCTS

Brand	Model
Avery Weigh-Tronix	Weigh Bar
Coti-Global	CG-WBL-SS-1.25Klb
Rice Lake	RL32011WB-T-1.25Klb

www.anyload.com
© 2025 ANYLOAD V1 dimensions and specifications subject to change without notice

ANYLOAD

Stainless Steel

563WS; 563WS30
563WS30-CG,
563WS30-E:

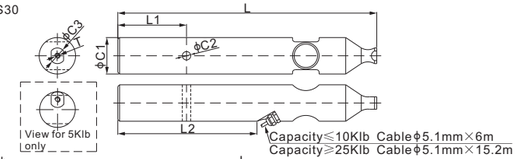

563WS30-50Klb,
563WS30-H:

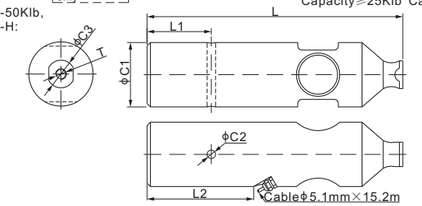

*: Input 3.0mV/V only

DIMENSIONS

RATED CAPACITY 563WS: lb	C1 inch	C1 mm	C2 inch	C2 mm	C3 inch	C3 mm	L inch	L mm	L1 inch	L1 mm	L2 inch	L2 mm	T
1,250	1.25	31.8	0.31	7.9	0.63	16.0	11.50	292.1	3.00	76.2	6.04	153.5	#8-32
2,500	1.62	41.1	0.37	9.4	0.70	17.8	11.50	292.1	3.00	76.2	5.59	142.0	#6-32
5,000	2.00	50.8	0.37	9.4	0.88	22.4	10.88	276.4	3.05	77.5	3.83	97.4	#8-32
10,000	2.50	63.5	0.37	9.4	0.88	22.4	12.63	320.8	3.05	77.5	4.20	106.9	#8-32
25,000	3.50	88.9	0.50	12.7	1.75	44.5	14.88	378.0	3.05	77.5	5.04	128.0	5/16-18 UNC-2B
25,000 (-CG)	3.50	88.8	0.50	12.7	1.76	44.7	14.88	378.0	3.66	93.1	7.64	194.1	5/16-18 UNC-2B
563WS30: lb													
37,500	3.50	88.9	0.50	12.7	1.75	44.5	14.88	378.0	3.05	77.5	5.04	128.0	5/16-18 UNC-2B
37,500 (-CG)	3.50	88.8	0.50	12.7	1.76	44.7	14.88	378.0	3.66	93.1	7.64	194.1	5/16-18 UNC-2B
50,000	3.74	95.0	0.50	12.7	1.61	40.9	14.88	378.0	3.74	95.0	7.05	179.0	5/8-16 UNC-2B
50,000 (-E)	3.50	88.9	0.50	12.7	1.73	44.0	14.88	378.0	3.51	89.1	7.76	197.0	5/16-24 UNF-2B
50,000 (-H)	3.74	95.0	0.51	12.9	1.75	44.5	14.88	378.0	3.63	92.1	7.76	197.0	5/16-24 UNF-2B

563WS30-F:

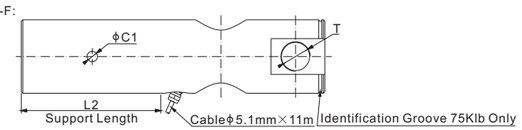

Hardware kit (to be ordered separately)

Part#: 563WS30-F-PARTS-A
include:
1 x Mounting Stud
1 x Lock Plate
1 x Support Post
1 x Rubber Shield
1 x Mounting Base
2 x O-rings
1 x Clamp
(Interchangeable: Avery Weigh-Tronix Easi-Post Suspension Kit)

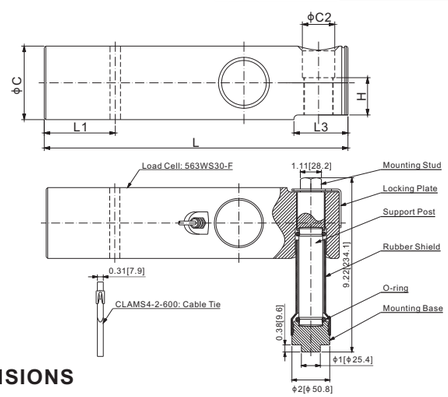

*: Input 3.0mV/V only

DIMENSIONS

RATED CAPACITY 563WS30-F: lb	C inch	C mm	C1 inch	C1 mm	C2 inch	C2 mm	L inch	L mm	L1 inch	L1 mm	L2 inch	L2 mm	L3 inch	L3 mm	H inch	H mm	T
60,000-75,000	3.75	95.2	0.53	13.5	1.65	42.0	15.5	393.7	3.63	92.1	7.13	181.0	2.76	70.0	1.90	48.3	1-½-18 UNEF

© 2025 ANYLOAD V1 dimensions and specifications subject to change without notice

Stainless Steel

SPECIFICATIONS

Full Scale Output	563WS: 2.0 mV/V ± 1% 563WS30: 3.0 mV/V ± 1%	**Input Resistance**	563WS;563WS30(CG): 350Ω ± 7 563WS30-F: 375Ω ± 25
Zero Balance	± 0.02 mV/V	**Output Resistance**	350Ω ± 3
Non-linearity	563WS;563WS30(CG): < ± 0.023% 563WS30-E(-F; -H): < ± 0.02%	**Recommended Excitation**	10V (15V Maximum)
		Insulation Resistance	>2 [50V DC] GΩ
Repeatability	563WS;563WS30(CG): < ± 0.023% 563WS30-E(-F; -H): < ± 0.02%	**Compensated Temperature Range**	-10°C to 50°C / 14°F to 122°F
		Safe Overload	150% of full scale
Hysteresis Error	563WS;563WS30(CG): < ± 0.023% 563WS30-E(-F; -H): < ± 0.03%	**Breaking Overload**	300% of full scale
		Seal Type / IP Rating	Environmentally Sealed / IP67
Creep in 30 min.	563WS;563WS30(CG): < ± 0.030% 563WS30-E(-F; -H): < ± 0.03%	**Cable Color Code**	Exc+ Red Exc- Black Sig+ Green Sig- White Shield Bare
Element Material	2Cr13 Stainless Steel		

Rated Capacity	Part Number*	Weight Approx. (lb)	INTERCHANGEABLE REFERENCE			
			Avery Weigh-Tronix	Coti-Global	Rice Lake	Rice Lake
1.25Klb**	563WS-1.25Klb-YZ**	4.85	Weigh Bar	CG-WB-SS-1.25Klb	RL75000 SS-1.25Klb	RL32011WB-L-1.25Klb
2.5Klb	563WS-2.5Klb-YZ	6.61	Weigh Bar	CG-WB-SS-2.5Klb	RL75000 SS-2.5Klb	RL32011WB-L-2.5Klb
5Klb	563WS-5Klb-YZ	13.23	Weigh Bar	CG-WB-SS-5Klb	RL75000 SS-5Klb	RL32011WB-L-5Klb
10Klb	563WS-10Klb-YZ	15.43	Weigh Bar	CG-WB-SS-10Klb		RL32011WB-L-10Klb
25Klb	563WS-25Klb-YZ	34.17	Weigh Bar			
25Klb	563WS-25Klb-YZ-CG	34.17		CG-WB-SS-25Klb		
37.5Klb	563WS30-37.5Klb-YZ-CG	40.79		CG-WB-SS-37.5Klb		
37.5Klb	563WS30-37.5Klb-YZ	40.79	Weigh Bar			
50Klb	563WS30-50Klb-YZ	46.30	Weigh Bar			
50Klb	563WS30-E-50Klb-YZ-RP	40.79	27173	CG-WB-SS-50Klb-27173		
50Klb	563WS30-H-50Klb-YZ-RP	46.30	50104	CG-WB-SS-50Klb-50104		
60Klb	563WS30-F-60Klb-YZ-RP	57.32	55829	CG-WB-SS-60Klb-55829		
75Klb	563WS30-F-75Klb-YZ-RP	57.32	AWT27-500080	CG-WB-SS-75Klb-EZPOST		

* ATEX, FM, IECEx approved versions carry the "-Ex" suffix.

**: This is to replace the load cell on LP and Max Deck floor scales from Avery Weigh-Tronix.
Check 563WS-1.25Klb-YZ-WBL if to replace Bolt-In Weigh Bar on Avery Weigh-Tronix old ProDec series.

563WS30: 10Klb-75Klb: up to NTEP 1:10 000 Class III / III L, Multiple Cell

563WS30: 25Klb-75Klb: up to OIML MAA C6, Y=25 000

For further available P/N's & specifications per NTEP/OIML classes, please contact us.

© 2025 ANYLOAD V1 dimensions and specifications subject to change without notice

563YA

ANYLOAD

Aluminum

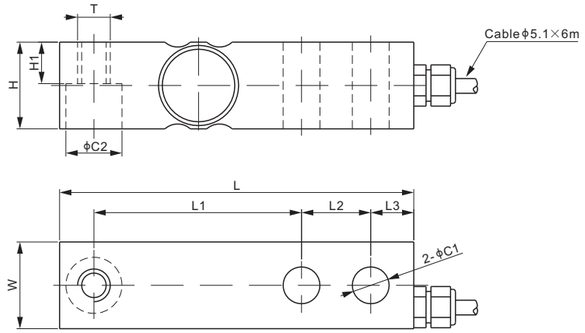

DIMENSIONS

RATED CAPACITY	C1	C2	H	H1	L	L1	L2	L3	T	W
lb/inches										
200; 300	0.53	0.81	1.25	0.60	5.12	3.00	1.00	0.62	1/2-20 UNF-2B	1.25
kg/mm (conversion of above dimensions)										
90.7; 136.1	13.5	20.6	31.8	15.2	130	76.2	25.4	15.8	1/2-20 UNF-2B	31.8

SPECIFICATIONS

Full Scale Output	3.0 mV/V ± 0.25%	**Recommended Excitation**	10V (15V Maximum)
Zero Balance	± 0.02 mV/V	**Insulation Resistance**	>2 [50V DC] GΩ
Non-linearity	< ± 0.017%	**Nominal Temperature Range**	-10°C to 40°C / 14°F to 104°F
Repeatability	< ± 0.017%	**Safe Overload**	150% of full scale
Hysteresis Error	< ± 0.017%	**Breaking Overload**	300% of full scale
Creep in 30 min.	< ± 0.023%	**Seal Type / IP Rating**	Environmentally Sealed / IP67
Input Resistance	350Ω ± 7	**Cable Color Code**	Exc+ Red Exc- Black Sig+ Green Sig- White Shield Bare
Output Resistance	350Ω ± 3		
Element Material	Aluminum, Clear Anodized		

PART NUMBER*

Rated Capacity	Part No.	Weight Approx. (kg)
200lb	563YA-200lb	0.6
300lb	563YA-300lb	0.6

* ATEX, FM, IECEx approved versions carry the "-Ex" suffix.

INTERCHANGEABLE REFERENCE

Brand	Model
Vishay Tedea-Huntleigh	3310*

** Interchangeable with Vishay Tedea-Huntleigh 3310 imperial thread*

© 2025 ANYLOAD V1 dimensions and specifications subject to change without notice

ANYLOAD

563YH

Alloy Steel

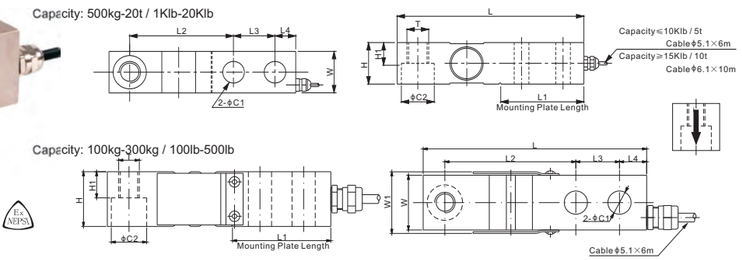

DIMENSIONS

RATED CAPACITY	C1	C2	H	H1	L	L1	L2	L3	L4	W	W1	T
lb/inches												
100-500	0.53	0.81	1.25	0.60	5.12	2.25	3.00	1.00	0.62	1.25	1.42	1/2-20 UNF-2B
1,000-4,000; SE5,000	0.53	0.81	1.25	0.60	5.12	2.25	3.00	1.00	0.62	1.25	-	1/2-20 UNF-2B
5,000-10,000	0.78	1.19	1.50	0.75	6.75	3.00	3.75	1.50	0.75	1.50	-	3/4-16 UNF-2B
15,000-20,000	1.03	1.81	2.00	1.00	8.75	4.00	4.75	2.00	1.00	2.00	-	1-14 UNS-2B
kg/mm												
100-300	13.5	20.6	31.8	15.2	130.0	57.2	76.2	25.4	15.8	31.8	36.0	M12X1.75
500-2,000	13.5	20.6	31.8	15.2	130.0	57.2	76.2	25.4	15.8	31.8	-	M12X1.75
2,500; 3,000; 5,000	19.8	30.2	38.1	19.1	171.5	76.2	95.3	38.1	19.1	38.1	-	M18X1.50
10,000	26.2	46.0	50.8	25.4	222.3	101.6	120.7	50.8	25.4	50.8	-	M24X2.00
20,000	30.2	50.0	58.0	32.0	241.5	110.0	132.0	55.0	27.5	58.0	-	M36X2.00

SPECIFICATIONS

Full Scale Output	3.0 mV/V ± 0.25%	**Recommended Excitation**	10V (15V Maximum)
Zero Balance	± 0.02 mV/V	**Insulation Resistance**	>2 [50V DC] GΩ
Non-linearity	< ± 0.017%	**Compensated Temperature Range**	-10°C to 50°C / 14°F to 122°F
Repeatability	< ± 0.017%	**Safe Overload**	150% of full scale
Hysteresis Error	< ± 0.017%	**Breaking Overload**	300% of full scale
Creep in 30 min.	< ± 0.023%	**Seal Type / IP Rating**	Cap.≤300kg/500lb: Environmentally Sealed / IP66
Input Resistance	400Ω ± 20 for kg; 350Ω ± 7 for lb		Cap.≥500kg/1Klb: Environmentally Sealed / IP67
Output Resistance	350Ω ± 3	**Cable Color Code**	Exc+ Red Exc- Black Sig+ Green Sig- White Shield Bare
Element Material	Alloy Steel, Nickel Plated		

PART NUMBER*

Rated Capacity	Part No.	Weight Approx. (kg)
100lb	563YH-100lb	1.0
250lb	563YH-250lb	1.0
500lb	563YH-500lb	1.0
1Klb	563YH-1Klb	1.0
1.5Klb	563YH-1.5Klb	1.0
2Klb	563YH-2Klb	1.0
2.5Klb	563YH-2.5Klb	1.0
LE2.5Klb	563YH-LE2.5Klb	1.7
4Klb	563YH-4Klb	1.0
SE5Klb	563YH-SE5Klb	1.0
5Klb	563YH-5Klb	1.8
10Klb	563YH-10Klb	1.8
15Klb	563YH-15Klb	4.0
20Klb	563YH-20Klb	4.0
100kg	563YH-100kg	1.0
200kg	563YH-200kg	1.0
300kg	563YH-300kg	1.0
500kg	563YH-500kg	1.0
750kg	563YH-750kg	1.0
1t	563YH-1t	1.0
1.5t	563YH-1.5t	1.0
2t	563YH-2t	1.0
2.5t	563YH-2.5t	1.8
3t	563YH-3t	1.8
5t	563YH-5t	1.8
10t	563YH-10t	4.0
20t	563YH-20t	5.6

SE refers to small envelope

* ATEX, FM, IECEx approved versions carry the "-Ex" suffix.

WEIGH MODULE

Model	Page
563YHM2	164
563YHM4-02	162

INTERCHANGEABLE REFERENCE

Brand	Model
Artech	30310
CAS	BSA*
Coti Global	CG-23*
Rice Lake	RL30000*
Rice Lake	RL32018*
Rice Lake	RL35023*
Vishay Celtron	SQB*
Vishay Revere Transducers	5123*
Vishay Sensortronics	65023A*
Vishay Tedea-Huntleigh	3411*

** The dimensions of C2 of interchangeable models are different: 0.53 inch for 100lb to SE5Klb, 0.78 inch for 5Klb and 10Klb, 1.03 inch for 15Klb and 20Klb*

250lb-2.5Klb & 200kg-1t: NTEP 1:5 000 Class III, Single Cell; NTEP 1:9 500 Class III, Multiple Cell
4Klb-20Klb & 2t-5t: NTEP 1:6 000 Class III, Single Cell; NTEP 1:10 000 Class III, Multiple Cell
1Klb-5Klb & 500kg-2.5t: OIML MAA C4, Y=15 000;
10Klb-20Klb & 3t-10t: OIML MAA C6, Y=8 500

For further available P/N's & specifications per NTEP/OIML classes, please contact us.

© 2025 ANYLOAD V1 dimensions and specifications subject to change without notice

563YH-23

ANYLOAD

Alloy Steel

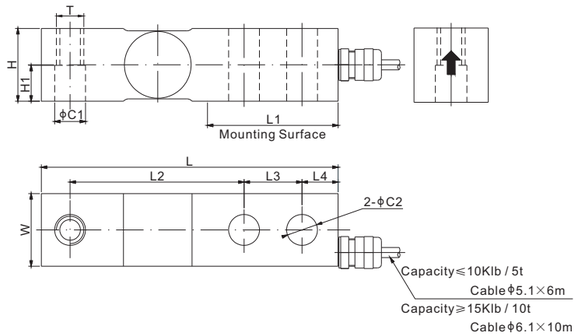

DIMENSIONS

RATED CAPACITY	C1	C2	H	H1	L	L1	L2	L3	L4	W	T
lb/inches											
250-4,000; SE5,000	0.53	0.53	1.25	0.62	5.12	2.25	3.00	1.00	0.62	1.25	1/2-20 UNF-2B
5,000-10,000	0.78	0.78	1.50	0.75	6.75	3.00	3.75	1.50	0.75	1.50	3/4-16 UNF-2B
15,000-20,000	1.03	1.03	2.00	1.00	8.88	4.00	4.88	2.00	1.00	2.00	1-14 UNS-2B

SPECIFICATIONS

Full Scale Output	3.0 mV/V ± 0.25%	**Element Material**	Alloy Steel, Nickel Plated
Zero Balance	± 0.02 mV/V	**Recommended Excitation**	10V (15V Maximum)
Non-linearity	Cap.≤750lb:< ± 0.03%; Cap.>750lb:< ± 0.02%	**Insulation Resistance**	>2 [50V DC] GΩ
		Compensated Temperature Range	-10°C to 50°C / 14°F to 122°F
Repeatability	< ± 0.02%	**Safe Overload**	150% of full scale
Hysteresis Error	Cap.≤750lb:< ± 0.03%; Cap.>750lb:< ± 0.02%	**Breaking Overload**	300% of full scale
		Seal Type / IP Rating	Environmentally Sealed / IP67
Creep in 30 min.	< ± 0.025%	**Cable Color Code**	Exc+ Red, Exc- Black, Sig+ Green, Sig- White, Shield Bare
Input Resistance	350Ω ± 7		
Output Resistance	350Ω ± 3		

PART NUMBER*

Rated Capacity	Part No.	Weight Approx. (kg)
250lb	563YH-23A-250lb	1.0
500lb	563YH-23A-500lb	1.0
750lb	563YH-23-750lb	1.0
1Klb	563YH-23-1Klb	1.0
1.5Klb	563YH-23-1.5Klb	1.0
2Klb	563YH-23-2Klb	1.0
2.5Klb	563YH-23-2.5Klb	1.0
3Klb	563YH-23-3Klb	1.0
4Klb	563YH-23-4Klb	1.0
SE5Klb	563YH-23-SE5Klb	1.0
5Klb	563YH-23-5Klb	1.8
10Klb	563YH-23-10Klb	1.8
15Klb	563YH-23-15Klb	4.0
20Klb	563YH-23-20Klb	4.0

SE refers to small envelope

* ATEX, FM, IECEx approved versions carry the "-Ex" suffix.

INTERCHANGEABLE REFERENCE

Brand	Model
Artech	30310
Coti Global	CG-23
Rice Lake	RL30000
Rice Lake	RL32018
Rice Lake	RL35023
Vishay Celtron	SQB
Vishay Revere Transducers	5123
Vishay Sensortronics	65023A
Vishay Tedea-Huntleigh	3411

250lb-2.5Klb: NTEP 1:5 000 Class III, Single Cell;
NTEP 1:9 500 Class III, Multiple Cell
4Klb-20Klb: NTEP 1:6 000 Class III, Single Cell;
NTEP 1:10 000 Class III, Multiple Cell
1Klb-5Klb: OIML MAA C4, Y=15 000;
10Klb-20Klb: OIML MAA C6, Y=8 500
For further available P/N's & specifications per NTEP/OIML classes, please contact us.

© 2025 ANYLOAD V1 dimensions and specifications subject to change without notice

ANYLOAD

563YS; 563YS30

Stainless Steel

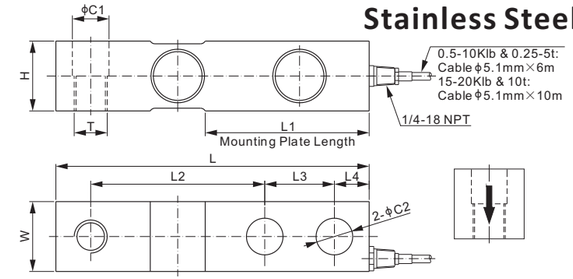

DIMENSIONS

RATED CAPACITY	C1	C2	H	L	L1	L2	L3	L4	W	T
lb/inches										
500-4,000; SE5,000	0.53	0.53	1.22	5.12	2.25	3.00	1.00	0.62	1.22	1/2-20 UNF-2B
5,000-10,000	0.79	0.79	1.50	6.75	3.00	3.75	1.50	0.75	1.50	3/4-16 UNF-2B
15,000-20,000	1.03	1.03	2.00	8.75	4.00	4.75	2.00	1.00	2.00	1-14 UNS-2B
kg/mm										
250-2,000	13.5	13.5	31.0	130.0	57.2	76.2	25.4	15.8	31.0	M12X1.75
3,000;5,000	20.0	20.0	38.1	171.5	76.2	95.3	38.1	19.1	38.1	M18X1.50
10,000	26.2	26.2	50.8	222.3	101.6	120.7	50.8	25.4	50.8	M24X2.00

SPECIFICATIONS

Full Scale Output	563YS: 2.0 mV/V ± 0.25%; 563YS30: 3.0 mV/V ± 0.25%	**Recommended Excitation**	10V (15V Maximum)
Zero Balance	± 0.02 mV/V	**Insulation Resistance**	>2 [50V DC] GΩ
Non-linearity	< ± 0.023%	**Compensated Temperature Range**	-10°C to 50°C / 14°F to 122°F
Repeatability	< ± 0.023%	**Safe Overload**	150% of full scale
Hysteresis Error	< ± 0.023%	**Breaking Overload**	300% of full scale
Creep in 30 min.	< ± 0.030%	**Seal Type / IP Rating**	Welded Seal / IP68
Input Resistance	350Ω ± 7	**Cable Color Code**	Exc+ Red, Exc- Black, Sig+ Green, Sig- White, Shield Bare
Output Resistance	350Ω ± 3		
Element Material	17-4PH Stainless Steel		

WEIGH MODULE

Model	Page
563YSM3-02	165

PART NUMBER*

Rated Capacity	Part No.	Weight Approx. (kg)
500lb	563YS-500lb	1.0
	563YS30GS-500lb	1.0
1Klb	563YS-1Klb	1.0
	563YS30-1Klb	1.0
2.5Klb	563YS-2.5Klb	1.0
	563YS30-2.5Klb	1.0
4Klb	563YS-4Klb	1.0
	563YS30-4Klb	1.0
SE5Klb	563YS-SE5Klb	1.0
	563YS30-SE5Klb	1.0
5Klb	563YS-5Klb	1.8
	563YS30-5Klb	1.8
10Klb	563YS-10Klb	1.8
	563YS30-10Klb	1.8
15Klb	563YS-15Klb	4.1
	563YS30-15Klb	4.1
20Klb	563YS-20Klb	4.1
	563YS30-20Klb	4.1
250kg	563YS-250kg	1.0
500kg	563YS-500kg	1.0
1t	563YS-1t	1.0
2t	563YS-2t	1.0
3t	563YS-3t	1.8
5t	563YS-5t	1.8
10t	563YS-10t	4.1

- Environmentally sealed for 563YS30, capacity=500lb
- SE refers to small envelope
* ATEX, FM, IECEx approved versions carry the "-Ex" suffix.

INTERCHANGEABLE REFERENCE

Brand	Model
563YS	
Coti Global	CG-23-SSW-02
Rice Lake	RL35082
Rice Lake	RLHTO
Vishay Sensortronics	65083S
Vishay Tedea-Huntleigh	3510-kg
563YS30	
Artech	SS30310
Coti Global	CG-23-SSW-03
HBM	B35*/H35**
Mettler-Toledo	0793
Rice Lake	RL32018S*
Rice Lake	RL32018S-HE
Rice Lake	RL35023S*
Rice Lake	RL35083
Rice Lake	RL39123
Vishay Celtron	SQB-HSS
Vishay Revere Transducers	9123
Vishay Sensortronics	65023S*
Vishay Sensortronics	65023SS***
Vishay Sensortronics	65083
Vishay Tedea-Huntleigh	3510-lbs

** Environmentally sealed / * *Welded seal*
*** *Environmentally sealed for capacities 1Klb-10Klb*

563YS, 500lb-2.5Klb & 250kg-1t: NTEP 1:5 000 Class III, S;
NTEP 1:9 500 Class III, M
4Klb-20Klb & 2t-5t: NTEP 1:6 000 Class III, S;
NTEP 1:10 000 Class III, M
563YS30, 500lb-2.5Klb: NTEP 1:5 000 Class III, S;
NTEP 1:9 500 Class III, M
4Klb-20Klb: NTEP 1:6 000 Class III, S;
NTEP 1:10 000 Class III, M
563YS, 1Klb-5Klb & 500kg-2t: OIML MAA C5, Y=26 000;
10Klb-20Klb & 3t-10t: OIML MAA C6, Y=8 500;
563YS30, 1Klb-5Klb: OIML MAA C4, Y=15 000;
10Klb-20Klb: OIML MAA C6, Y=8 500;
For further available P/N's & specifications per NTEP/OIML classes, please contact us.

© 2025 ANYLOAD V1 dimensions and specifications subject to change without notice

563YHFK

ANYLOAD

Alloy Steel

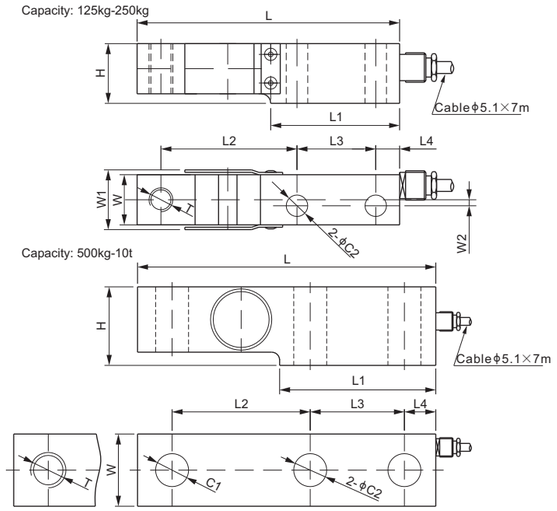

DIMENSIONS

RATED CAPACITY	C1	C2	H	L	L1	L2	L3	L4	W	W1	W2	T
kg/mm												
125–250	–	9	25	110	54	57	33	10	21	25	2.5	M10
500–1,000	–	11	32	125	63	61.5	38	13	29	–	–	M12
2,500–5,000	21	21	50	190	99.5	88	60	20	46	–	–	–
10,000	26	26	66	227	117	117	60	25	50	–	–	–
lb/inches (conversion of above dimensions)												
276–551	–	0.35	0.98	4.33	2.13	2.24	1.30	0.39	0.83	0.98	0.10	M10
1,102–2,205	–	0.43	1.26	4.92	2.48	2.42	1.50	0.51	1.14	–	–	M12
5,512–11,023	0.83	0.83	1.97	7.48	3.92	3.46	2.36	0.79	1.81	–	–	–
22,046	1.02	1.02	2.60	8.94	4.61	4.61	2.36	0.98	1.97	–	–	–

SPECIFICATIONS

Full Scale Output	125-500kg, 10t: 2.2 mV/V ± 0.25% 1-5t: 2.2 mV/V ± 0.05%	**Recommended Excitation**	10V (15V Maximum)
		Insulation Resistance	>2 [50V DC] GΩ
Zero Balance	± 0.02 mV/V	**Compensated Temperature Range**	-10°C to 50°C / 14°F to 122°F
Non-linearity	< ± 0.017%	**Safe Overload**	150% of full scale
Repeatability	< ± 0.017%	**Breaking Overload**	300% of full scale
Hysteresis Error	< ± 0.017%	**Seal Type / IP Rating**	Cap.≤250kg: Environmentally Sealed / IP66
Creep in 30 min.	< ± 0.023%		Cap.≥500kg: Environmentally Sealed / IP67
Input Resistance	385Ω ± 15	**Cable Color Code**	Exc+ Red Exc- Black Sig+ Green Sig- White Shield Bare
Output Resistance	350Ω ± 3		
Element Material	Alloy Steel, Nickel Plated		

PART NUMBER*

Rated Capacity	Part No.	Weight Approx. (kg)
125kg	563YHFK-125kg	0.7
250kg	563YHFK-250kg	0.7
500kg	563YHFK-500kg	1.0
1t	563YHFK-1t	1.0
2.5t	563YHFK-2.5t	2.8
5t	563YHFK-5t	3.0
10t	563YHFK-10t	4.9

* ATEX, FM, IECEx approved versions carry the "-Ex" suffix.

INTERCHANGEABLE REFERENCE

ANYLOAD Part No.	Kelba Model
563YHFK-125kg	KA125N
563YHFK-250kg	KA250N
563YHFK-500kg	KA500N
563YHFK-1t	KA1000N
563YHFK-2.5t	KA2500N
563YHFK-5t	KA5000N
563YHFK-10t	KA10000N

125kg-1t: NTEP 1:5 000 Class III, Single Cell;
NTEP 1:9 500 Class III, Multiple Cell
2.5t-5t: NTEP 1:6 000 Class III, Single Cell;
NTEP 1:10 000 Class III, Multiple Cell
500kg-2.5t: OIML MAA C5, Y=26 000;
5t-10t: OIML MAA C6, Y=8 500
For further available P/N's & specifications per NTEP/OIML classes, please contact us.

www.anyload.com
© 2025 ANYLOAD V1 dimensions and specifications subject to change without notice

ANYLOAD

563YHMS

Alloy Steel

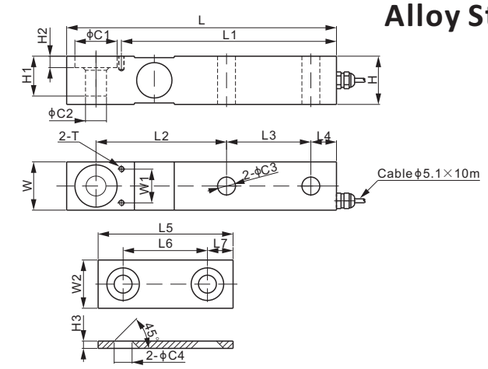

DIMENSIONS

RATED CAPACITY	C1	C2	C3	C4	H	H1	H2	H3	L	L1	L2	L3	L4	L5	L6	L7	W	W1	W2	T
Klb/inches																				
1–5	1.25	0.62	0.53	0.53	1.43	1.18	0.34	0.22	8.00	6.38	3.87	2.50	0.76	4.00	2.50	0.76	1.43	1.00	1.43	8–32 UNC Depth0.37
10	1.50	0.87	0.84	0.84	1.70	1.08	0.39	0.22	9.25	7.51	4.87	2.62	0.89	4.40	2.62	0.89	1.70	1.12	1.70	10–32 UNF Depth0.37
20–30	1.87	1.25	1.06	1.06	2.37	0.82	0.37	0.22	11.0	8.50	5.50	3.25	1.00	5.24	3.25	1.00	2.37	1.75	2.37	10–32 UNF Depth0.37
kg/mm (conversion of above dimensions)																				
453.6–2,268	31.8	15.8	13.5	13.5	36.3	30.0	8.6	5.5	203.2	162.0	98.3	63.5	19.3	101.6	63.5	19.3	36.3	25.4	36.3	8–32 UNC Depth9.4
4,535.9	38.1	22.1	21.3	21.3	43.2	27.4	9.9	5.5	235.0	190.8	123.7	66.6	22.6	111.8	66.6	22.6	43.2	28.5	43.2	10–32 UNF Depth9.4
9,071.8–13,607.8	47.5	31.8	26.9	26.9	60.2	20.8	9.4	5.5	279.4	215.8	139.7	82.6	25.3	133.2	82.6	25.3	60.2	44.5	60.2	10–32 UNF Depth9.4

SPECIFICATIONS

Full Scale Output	2.0 mV/V ± 0.07%	**Recommended Excitation**	10V (15V Maximum)
Zero Balance	± 0.02 mV/V	**Insulation Resistance**	>2 [50V DC] GΩ
Non-linearity	< ± 0.017%	**Compensated Temperature Range**	-10°C to 50°C / 14°F to 122°F
Repeatability	< ± 0.017%	**Safe Overload**	150% of full scale
Hysteresis Error	< ± 0.017%	**Breaking Overload**	300% of full scale
Creep in 30 min.	< ± 0.023%	**Seal Type / IP Rating**	Environmentally Sealed / IP67
Input Resistance	350Ω ± 7	**Cable Color Code**	Exc+ Red Exc- Black Sig+ Green Sig- White Shield Bare
Output Resistance	350Ω ± 3		
Element Material	Alloy Steel, Nickel Plated		

PART NUMBER*

Rated Capacity	Part No.	Weight Approx. (kg)
1Klb	563YHMS-1Klb	2.5
3Klb	563YHMS-3Klb	2.5
5Klb	563YHMS-5Klb	2.5
10Klb	563YHMS-10Klb	3.8
20Klb	563YHMS-20Klb	7.5
30Klb	563YHMS-30Klb	7.5

* ATEX, FM, IECEx approved versions carry the "-Ex" suffix.

1Klb-3Klb: NTEP 1:5 000 Class III, Single Cell;
NTEP 1:9 500 Class III, Multiple Cell
5Klb-20Klb: NTEP 1:6 000 Class III, Single Cell;
NTEP 1:10 000 Class III, Multiple Cell
1Klb-5Klb: OIML MAA C5, Y=26 000;
10Klb-30Klb: OIML MAA C6, Y=8 500
For further available P/N's & specifications per NTEP/OIML classes, please contact us.

INTERCHANGEABLE REFERENCE

Brand	Model
Coti Global	CG-SB2L/SB2M
Coti Global	CG-743
Mettler-Toledo	Masstron ML4311~4449
Mettler-Toledo	0743
Rice Lake	RLSB2MLW*
Rice Lake	RLSB2L**

** RLSB2MLW is stainless steel for capacities 1Klb-20Klb;*
*** RLSB2L is alloy steel for capacities 35Klb & 45Klb.*

www.anyload.com
© 2025 ANYLOAD V1 dimensions and specifications subject to change without notice

563YHRT

ANYLOAD

Alloy Steel

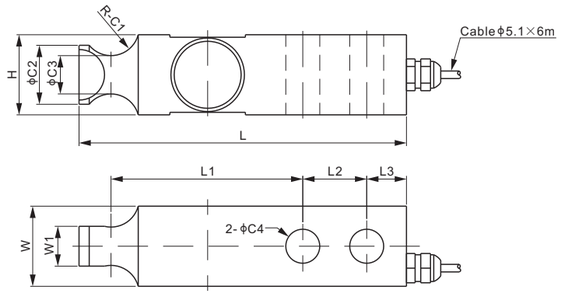

DIMENSIONS

RATED CAPACITY	C1	C2	C3	C4	H	L	L1	L2	L3	W	W1
Klb/inches											
1–4	0.44	0.92	0.60	0.53	1.25	5.12	3.00	1.00	0.62	1.25	0.62
5–10	0.56	1.20	0.86	0.78	1.50	6.75	3.75	1.50	0.75	1.50	0.90
kg/mm (conversion of above dimensions)											
453.6–1,814.4	11.2	23.4	15.2	13.5	31.8	130.1	76.2	25.4	15.8	31.8	15.8
2,268.0–4,535.9	14.2	30.5	21.8	19.8	38.1	171.5	95.3	38.1	19.1	38.1	22.9

SPECIFICATIONS

Full Scale Output	3.0 mV/V ± 0.25%	**Recommended Excitation**	10V (15V Maximum)
Zero Balance	± 0.02 mV/V	**Insulation Resistance**	>2 [50V DC] GΩ
Non-linearity	< ± 0.017%	**Compensated Temperature Range**	-10°C to 50°C / 14°F to 122°F
Repeatability	< ± 0.017%	**Safe Overload**	150% of full scale
Hysteresis Error	< ± 0.017%	**Breaking Overload**	300% of full scale
Creep in 30 min.	< ± 0.023%	**Seal Type / IP Rating**	Environmentally Sealed / IP67
Input Resistance	350Ω ± 7	**Cable Color Code**	Exc+ Red Exc- Black
Output Resistance	350Ω ± 3		Sig+ Green Sig- White
Element Material	Alloy Steel, Nickel Plated		Shield Bare

PART NUMBER*

Rated Capacity	Part No.	Weight Approx. (kg)
1Klb	563YHRT-1Klb	1.0
2.5Klb	563YHRT-2.5Klb	1.0
4Klb	563YHRT-4Klb	1.0
5Klb	563YHRT-5Klb	1.7
10Klb	563YHRT-10Klb	1.7

* ATEX, FM, IECEx approved versions carry the "-Ex" suffix.

1Klb-2.5Klb: NTEP 1:5 000 Class III, Single Cell;
NTEP 1:9 500 Class III, Multiple Cell
4Klb-10Klb: NTEP 1:6 000 Class III, Single Cell;
NTEP 1:10 000 Class III, Multiple Cell
1Klb-5Klb: OIML MAA C4, Y=15 000;
10Klb: OIML MAA C6, Y=8 500
For further available P/N's & specifications per NTEP/OIML classes, please contact us.

INTERCHANGEABLE REFERENCE

Brand	Model
Artech	30410
Coti Global	CG-30410
Vishay Revere Transducers	5723

© 2025 ANYLOAD V1 dimensions and specifications subject to change without notice

ANYLOAD

563YSBK; 563YSBKUN

Stainless Steel

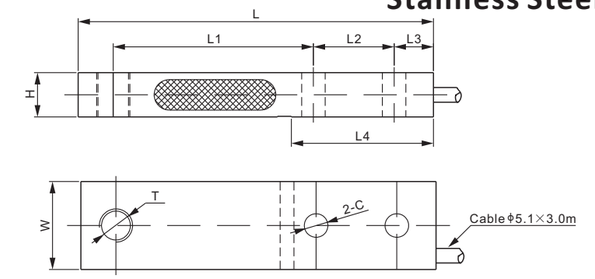

DIMENSIONS

RATED CAPACITY	C	H	L	L1	L2	L3	L4	W	T
563YSBK: kg/mm									
200	13.0	12.7	128.5	76.2	25.4	14.2	54.0	31.8	M12
500	13.0	15.9	128.5	76.2	25.4	14.2	54.0	31.8	M12
1,000	13.0	19.1	128.5	76.2	25.4	14.2	54.0	31.8	M12
2,000	13.0	25.4	128.5	76.2	25.4	14.2	54.0	31.8	M12
lb/inches (conversion of above dimensions)									
441	0.51	0.50	5.06	3.00	1.00	0.56	2.12	1.25	M12
1,102	0.51	0.63	5.06	3.00	1.00	0.56	2.12	1.25	M12
2,205	0.51	0.75	5.06	3.00	1.00	0.56	2.12	1.25	M12
4,409	0.51	1.00	5.06	3.00	1.00	0.56	2.12	1.25	M12
563YSBKUN: kg/mm									
200	13.0	12.7	128.5	76.2	25.4	14.2	54.0	31.8	1/2–20 UNF
500	13.0	15.9	128.5	76.2	25.4	14.2	54.0	31.8	1/2–20 UNF
1,000	13.0	19.1	128.5	76.2	25.4	14.2	54.0	31.8	1/2–20 UNF
2,000	13.0	25.4	128.5	76.2	25.4	14.2	54.0	31.8	1/2–20 UNF
lb/inches (conversion of above dimensions)									
441	0.51	0.50	5.06	3.00	1.00	0.56	2.12	1.25	1/2–20 UNF
1,102	0.51	0.63	5.06	3.00	1.00	0.56	2.12	1.25	1/2–20 UNF
2,205	0.51	0.75	5.06	3.00	1.00	0.56	2.12	1.25	1/2–20 UNF
4,409	0.51	1.00	5.06	3.00	1.00	0.56	2.12	1.25	1/2–20 UNF

SPECIFICATIONS

Full Scale Output	2.0 mV/V ± 0.1%	**Recommended Excitation**	10V (15V Maximum)
Zero Balance	± 0.02 mV/V	**Insulation Resistance**	>2 [50V DC] GΩ
Non-linearity	< ± 0.023%	**Compensated Temperature Range**	-10°C to 50°C / 14°F to 122°F
Repeatability	< ± 0.017%	**Safe Overload**	150% of full scale
Hysteresis Error	< ± 0.023%	**Breaking Overload**	300% of full scale
Creep in 30 min.	< ± 0.023%	**Seal Type / IP Rating**	Environmentally Sealed / IP67
Input Resistance	1100Ω ± 50	**Cable Color Code**	Exc+ Red Exc- Black
Output Resistance	1000Ω ± 5		Sig+ Green Sig- White
Element Material	2Cr13 Stainless Steel		Shield Bare

PART NUMBER*

Rated Capacity	Part No.	Weight Approx. (kg)
200kg	563YSBK-200kg-YZ	0.4
	563YSBKUN-200kg-YZ	0.4
500kg	563YSBK-500kg-YZ	0.4
	563YSBKUN-500kg-YZ	0.4
1t	563YSBK-1t-YZ	0.6
	563YSBKUN-1t-YZ	0.6
2t	563YSBK-2t-YZ	0.8
	563YSBKUN-2t-YZ	0.8

* ATEX, FM, IECEx approved versions carry the "-Ex" suffix.

INTERCHANGEABLE REFERENCE

Brand	Model
Flintec	BK2

© 2025 ANYLOAD V1 dimensions and specifications subject to change without notice

563YSLB

ANYLOAD

Stainless Steel

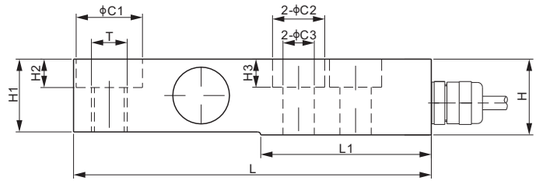

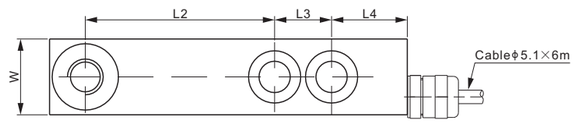

RoHS

DIMENSIONS

RATED CAPACITY	C1	C2	C3	H	H1	H2	H3	L	L1	L2	L3	L4	W	T
lb/inches														
500; 1,000; 2,500	0.88	0.69	0.41	1.00	0.96	0.37	0.37	4.72	2.25	2.50	0.75	1.00	1.00	M12X1.75
kg/mm (conversion of above dimensions)														
226.8; 453.6; 1,134.0	22.2	17.5	10.5	25.4	24.4	9.5	9.4	120.0	57.2	63.5	19.1	25.4	25.4	M12X1.75

SPECIFICATIONS

Full Scale Output	1.85-1.9 mV/V	**Recommended Excitation**	10V (15V Maximum)
Zero Balance	±0.02 mV/V	**Insulation Resistance**	>2［50V DC］GΩ
Non-linearity	<±0.023%	**Compensated Temperature Range**	-10°C to 50°C / 14°F to 122°F
Repeatability	<±0.023%	**Safe Overload**	150% of full scale
Hysteresis Error	<±0.023%	**Breaking Overload**	300% of full scale
Creep in 30 min.	<±0.030%	**Seal Type / IP Rating**	Environmentally Sealed / IP67
Input Resistance	350Ω ±7	**Cable Color Code**	Exc+ Red Exc- Black Sig+ Green Sig- White Shield Bare
Output Resistance	350Ω ±3		
Element Material	2Cr13 Stainless Steel		

PART NUMBER*

Rated Capacity	Part No.	Weight Approx. (kg)
500lb	563YSLB-500lb-YZ	0.7
1Klb	563YSLB-1Klb-YZ	0.7
2.5Klb	563YSLB-2.5Klb-YZ	0.7

* ATEX, FM, IECEx approved versions carry the "-Ex" suffix.

INTERCHANGEABLE REFERENCE

Brand	Part No.	Anyload Part No.
Cardinal	LFB-500HMT	563YSLB-500lb-YZ
	LFB-1000HMT	563YSLB-1Klb-YZ
	LFB-2500HMT	563YSLB-2.5Klb-YZ
Coti Global	CG-HMT	

www.anyload.com
© 2025 ANYLOAD V1 dimensions and specifications subject to change without notice

ANYLOAD

563YSLF

Stainless Steel

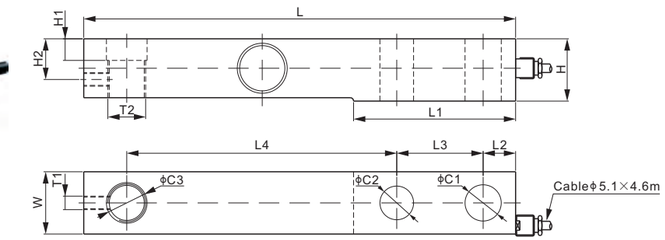

RoHS

DIMENSIONS

RATED CAPACITY	C1	C2	C3	H	H1	H2	L	L1	L2	L3	L4	W	T1	T2
Klb/inches														
1.5-2.5	0.59	0.53	0.69	1.13	0.56	0.82	9.00	–	0.62	1.75	6.00	1.19	#10-32	5/8-18 UNF
5	0.84	0.78	0.94	1.44	0.50	0.94	10.00	3.75	0.75	2.00	6.25	1.44	#10-32	7/8-14 UNF
kg/mm (conversion of above dimensions)														
680.4-1,134	15.0	13.5	17.5	28.7	14.2	20.8	228.6	–	15.8	44.5	152.4	30.2	#10-32	5/8-18 UNF
2,268	21.3	19.8	23.9	36.6	12.7	23.9	254.0	95.3	19.1	50.8	158.8	36.6	#10-32	7/8-14 UNF

SPECIFICATIONS

Full Scale Output	2.0 mV/V ±0.25%	**Recommended Excitation**	10V (15V Maximum)
Zero Balance	±0.02 mV/V	**Insulation Resistance**	>2［50V DC］GΩ
Non-linearity	<±0.030%	**Compensated Temperature Range**	-10°C to 50°C / 14°F to 122°F
Repeatability	<±0.023%	**Safe Overload**	150% of full scale
Hysteresis Error	<±0.020%	**Breaking Overload**	300% of full scale
Creep in 30 min.	<±0.030%	**Seal Type / IP Rating**	Environmentally Sealed / IP67
Input Resistance	1000Ω ±15	**Cable Color Code**	Exc+ Red Exc- Black Sig+ Green Sig- White Shield Bare
Output Resistance	1000Ω ±5		
Element Material	2Cr13 Stainless Steel		

PART NUMBER*

Rated Capacity	Part No.	Weight Approx. (kg)
1.5Klb	563YSLF-1.5Klb-YZ	-
2.5Klb	563YSLF-2.5Klb-YZ	1.7
5Klb	563YSLF-5Klb-YZ	2.5

* ATEX, FM, IECEx approved versions carry the "-Ex" suffix.

INTERCHANGEABLE REFERENCE

Brand	Model
Coti Global	CG-BLF
HBM	BLF
Fairbanks	3-53581-X
Fairbanks	3-52921-1

www.anyload.com
© 2025 ANYLOAD V1 dimensions and specifications subject to change without notice

563YSMT

ANYLOAD

Stainless Steel

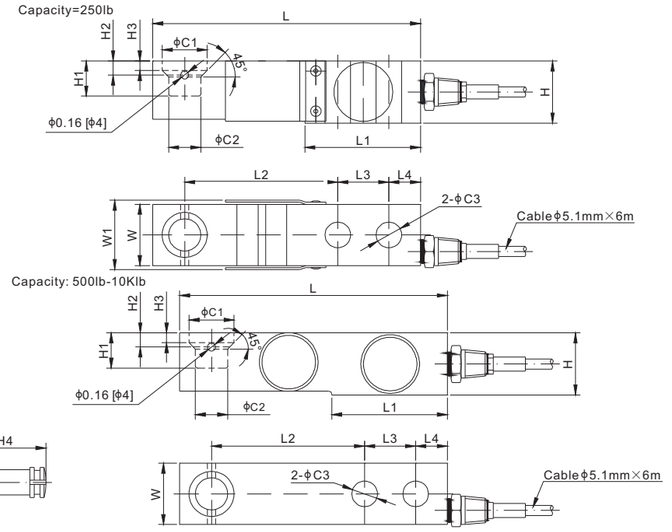

Foot or PIN to be ordered separately.

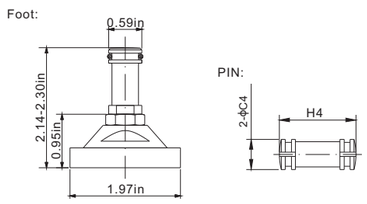

DIMENSIONS

RATED CAPACITY	C1	C2	C3	C4	H	H1	H2	H3	H4	L	L1	L2	L3	L4	W	W1
lb/inches																
250	0.88	0.63	0.50	0.59	1.22	0.69	0.28	0.19	1.5	5.25	2.27	3.00	1.00	0.62	1.20	1.38
500–4,000	0.88	0.63	0.50	0.59	1.22	0.69	0.28	0.19	1.5	5.25	2.27	3.00	1.00	0.62	1.20	–
5,000	0.88	0.63	0.50	0.59	1.40	0.92	0.47	0.38	1.5	5.38	2.28	3.00	1.00	0.62	1.46	–
10,000	1.38	0.88	0.75	–	1.68	1.17	0.59	0.46	–	6.87	3.34	3.75	1.50	0.75	1.68	–
kg/mm (conversion of above dimensions)																
113.4	22.4	16.0	12.7	15.0	30.9	17.5	7.0	4.8	38.1	133.3	57.6	76.2	25.4	15.8	30.5	35.0
226.8–1,814.4	22.4	16.0	12.7	15.0	30.9	17.5	7.0	4.8	38.1	133.3	57.6	76.2	25.4	15.8	30.5	–
2,268.0	22.4	16.0	12.7	15.0	35.5	23.4	11.9	9.7	38.1	136.7	57.9	76.2	25.4	15.8	37.1	–
4,535.9	35.1	22.4	19.1	–	42.6	29.7	15.0	11.8	–	174.5	84.8	95.3	38.1	19.1	42.7	–

SPECIFICATIONS

Full Scale Output	2.0 mV/V ± 0.25%	**Recommended Excitation**	10V (15V Maximum)
Zero Balance	± 0.02 mV/V	**Insulation Resistance**	>2 [50V DC] GΩ
Non-linearity	< ± 0.023%	**Compensated Temperature Range**	-10°C to 50°C / 14°F to 122°F
Repeatability	< ± 0.017%	**Safe Overload**	150% of full scale
Hysteresis Error	< ± 0.023%	**Breaking Overload**	300% of full scale
Creep in 30 min.	< ± 0.023%	**Seal Type / IP Rating**	Cap.=250lb:Environmentally Sealed / IP66 Cap.≥500lb:Welded Seal / IP68
Input Resistance	350Ω ± 7		
Output Resistance	350Ω ± 3	**Cable Color Code**	Exc+ Red Exc- Black Sig+ Green Sig- White Shield Bare
Element Material	17-4PH Stainless Steel		

PART NUMBER*

Load Cell

Rated Capacity	Part No.	Weight Approx. (kg)
250lb	563YSMT-250lb	1.0
500lb	563YSMT-500lb	1.0
1.25Klb	563YSMT-1.25Klb	1.0
2.5Klb	563YSMT-2.5Klb	1.0
4Klb	563YSMT-4Klb	1.0
5Klb	563YSMT-5Klb	1.3
10Klb	563YSMT-10Klb	2.0

Hardware

Hardware	Load Cell Capacity	Part No.	Shipping Weight (kg)
Pin	500lb-5Klb	563YSMT-(0.5-5)Klb-PIN	0.1
Foot	250lb-5Klb	AMFS4-H-50	0.2

* ATEX, FM, IECEx approved versions carry the "-Ex" suffix.

INTERCHANGEABLE REFERENCE

Brand	Model
Coti Global	CG-745
HBM	THC
Mettler-Toledo	MT0744*
Mettler-Toledo	MT0745A
Rice Lake	RL30745

** MT0744 is environmentally sealed and interchangeable with ANYLOAD 563YSMT-250lb*

250lb-2.5Klb: NTEP 1:5 000 Class III, Single Cell;
NTEP 1:9 500 Class III, Multiple Cell
4Klb-10Klb: NTEP 1:6 000 Class III, Single Cell;
NTEP 1:10 000 Class III, Multiple Cell
1.25Klb-5Klb: OIML MAA C5, Y=26 000;
10Klb: OIML MAA C6, Y=8 500
For further available P/N's & specifications per NTEP/OIML classes, please contact us.

www.anyload.com
© 2025 ANYLOAD V1 dimensions and specifications subject to change without notice

ANYLOAD

563YSMT-4

Stainless Steel

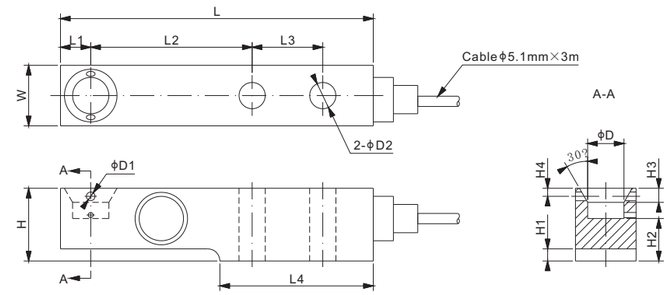

Foot or PIN to be ordered separately.

DIMENSIONS

RATED CAPACITY	L	L1	L2	L3	L4	H	H1	H2	H3	H4	W	D	D1	D2
kN/mm														
5–20	155.0	15.0	80.0	35.0	76.0	36.0	6.0	21.0	7.0	4.0	30.0	18.0	4.3	13.0
50	190.0	21.0	105.0	40.0	93.0	49.0	8.0	28.5	6.0	8.0	43.0	25.0	4.3	21.0
100	245.0	30.0	135.0	50.0	120.0	73.0	12.5	42.0	10.0	–	60.0	30.0	4.3	27.0
kN/inches (conversion of above dimensions)														
5–20	6.10	0.59	3.15	1.38	2.99	1.42	0.24	0.83	0.28	0.16	1.18	0.71	0.17	0.51
50	7.48	0.83	4.13	1.57	3.66	1.93	0.31	1.12	0.24	0.31	1.69	0.98	0.17	0.83
100	9.46	1.18	5.31	1.97	4.72	2.87	0.49	1.65	0.39	–	2.36	1.18	0.17	1.06

SPECIFICATIONS

Full Scale Output	2.0 mV/V ± 0.1%	**Recommended Excitation**	10V (15V Maximum)
Zero Balance	± 0.1 mV/V	**Insulation Resistance**	>2 [50V DC] GΩ
Non-linearity	< ± 0.017%	**Compensated Temperature Range**	-10°C to 40°C / 14°F to 104°F
Repeatability	< ± 0.017%	**Safe Overload**	200% of full scale
Hysteresis Error	< ± 0.017%	**Breaking Overload**	300% of full scale
Creep in 30 min.	< ± 0.017%	**Seal Type / IP Rating**	Environmentally Sealed / IP68
Input Resistance	1100Ω ± 50	**Cable Color Code**	Exc+ Green Exc- Black Sig+ White Sig- Red Shield Yellow
Output Resistance	1000Ω ± 5		
Element Material	17-4PH Stainless Steel		

PART NUMBER*

Load Cell

Rated Capacity	Part No.	Weight Approx. (kg)
5kN	563YSMT-4-5kN	1.2
10kN	563YSMT-4-10kN	1.2
20kN	563YSMT-4-20kN	1.2
50kN	563YSMT-4-50kN	-
100kN	563YSMT-4-100kN	-

* ATEX, FM, IECEx approved versions carry the "-Ex" suffix.

INTERCHANGEABLE REFERENCE

Brand	Model
Flintec	SB4

5kN-10kN: NTEP 1:5 000 Class III, Single Cell;
NTEP 1:9 500 Class III, Multiple Cell
20kN-50kN: NTEP 1:6 000 Class III, Single Cell;
NTEP 1:10 000 Class III, Multiple Cell
5kN-20kN: OIML MAA C5, Y=26 000;
50kN-100kN: OIML MAA C6, Y=8 500
For further available P/N's & specifications per NTEP/OIML classes, please contact us.

www.anyload.com
© 2025 ANYLOAD V1 dimensions and specifications subject to change without notice

563YSRS

ANYLOAD

Stainless Steel

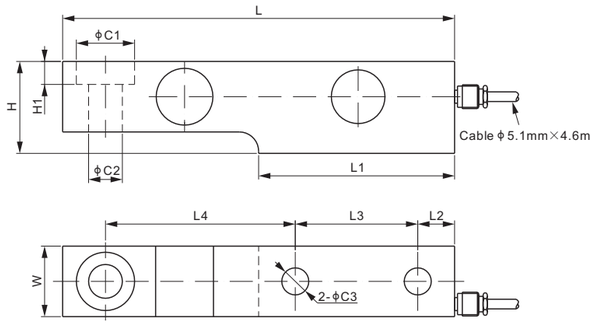

RoHS

DIMENSIONS

RATED CAPACITY	C1	C2	C3	H	H1	L	L1	L2	L3	L4	W
Klb/inches											
1–5	1.19	0.69	0.55	1.87	0.47	8.00	4.00	0.75	2.50	3.87	1.44
kg/mm (conversion of above dimensions)											
454–2,268	30.2	17.5	14.0	47.6	11.9	203.2	101.6	19.1	63.5	98.4	36.5

SPECIFICATIONS

Full Scale Output	2.0 mV/V ± 1%	**Recommended Excitation**	10V (15V Maximum)
Zero Balance	± 0.02 mV/V	**Insulation Resistance**	>2 [50V DC] GΩ
Non-linearity	< ± 0.023%	**Compensated Temperature Range**	-10°C to 50°C / 14°F to 122°F
Repeatability	< ± 0.023%	**Safe Overload**	150% of full scale
Hysteresis Error	< ± 0.023%	**Breaking Overload**	300% of full scale
Creep in 30 min.	< ± 0.030%	**Seal Type / IP Rating**	Welded Seal / IP68
Input Resistance	350Ω ± 7	**Cable Color Code**	Exc+ Red Exc- Black Sig+ Green Sig- White Shield Bare
Output Resistance	350Ω ± 3		
Element Material	17-4PH Stainless Steel		

PART NUMBER*

Rated Capacity	Part No.	Weight Approx. (kg)
1Klb	563YSRS-1Klb	2.0
2Klb	563YSRS-2Klb	2.0
5Klb	563YSRS-5Klb	2.0

* ATEX, FM, IECEx approved versions carry the "-Ex" suffix.

1Klb-2Klb: NTEP 1:5 000 Class III, Single Cell;
NTEP 1:9 500 Class III, Multiple Cell
5Klb: NTEP 1:6 000 Class III, Single Cell;
NTEP 1:10 000 Class III, Multiple Cell
OIML MAA C5, Y=26 000

For further available P/N's & specifications per NTEP/OIML classes, please contact us.

INTERCHANGEABLE REFERENCE

Brand	Model
Artech	SS30610
Coti Global	CG-SB3
HBM	SB3
Rice Lake	RLSSB
Vishay Revere Transducers	SSB

www.anyload.com
© 2025 ANYLOAD V1 dimensions and specifications subject to change without notice

ANYLOAD

563YSSB

Stainless Steel

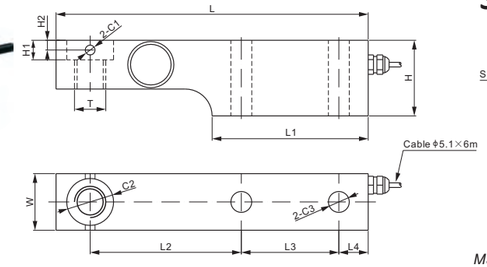

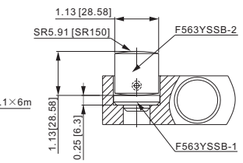

RoHS

Hardware to be ordered separately.

Material of both F563YSSB-1 & F563YSSB-2 is 2Cr13 with electropolishing

DIMENSIONS

RATED CAPACITY	C1	C2	C3	H	H1	H2	L	L1	L2	L3	L4	W	T
Klb/inches													
2.5–5	0.25	1.20	0.54	1.94	0.75	0.25	8.00	4.00	3.87	2.50	0.75	1.45	3/4–16 UNF–2B
10–20	0.25	1.20	0.78	2.46	0.75	0.25	9.00	4.00	5.25	2.00	0.75	1.94	0.69
kg/mm (conversion of above dimensions)													
1,134.0–2,268.0	6.35	30.5	13.6	49.2	19.0	6.35	203.2	101.6	98.4	63.5	19.1	36.8	3/4–16 UNF–2B
4,535.9–9,071.8	6.35	30.5	19.9	62.5	19.0	6.35	228.6	101.6	133.4	50.8	19.1	49.3	17.45

SPECIFICATIONS

Full Scale Output	2.0 mV/V ± 0.25%	**Recommended Excitation**	10V (15V Maximum)
Zero Balance	± 0.02 mV/V	**Insulation Resistance**	>2 [50V DC] GΩ
Non-linearity	< ± 0.023%	**Compensated Temperature Range**	-10°C to 50°C / 14°F to 122°F
Repeatability	< ± 0.023%	**Safe Overload**	150% of full scale
Hysteresis Error	< ± 0.023%	**Breaking Overload**	300% of full scale
Creep in 30 min.	< ± 0.030%	**Seal Type / IP Rating**	Welded Seal / IP68
Input Resistance	350Ω ± 7	**Cable Color Code**	Exc+ Red Exc- Black Sig+ Green Sig- White Shield Bare
Output Resistance	350Ω ± 3		
Element Material	17-4PH Stainless Steel		

PART NUMBER*

Rated Capacity	Part No.	Weight Approx. (kg)
2.5Klb	563YSSB-2.5Klb	2.3
5Klb	563YSSB-5Klb	2.4
10Klb	563YSSB-10Klb	4.0
20Klb	563YSSB-20Klb	4.8

Hardware

Hardware	Load Cell Capacity	Part No.	Weight Approx. (kg)
Insert	(2.5-20)Klb	F563YSSB-1	-
Rocker Pin	(2.5-20)Klb	F563YSSB-2	-

* ATEX, FM, IECEx approved versions carry the "-Ex" suffix.

2.5Klb: NTEP 1:5 000 Class III, Single Cell;
NTEP 1:9 500 Class III, Multiple Cell
5Klb-20Klb: NTEP 1:6 000 Class III, Single Cell;
NTEP 1:10 000 Class III, Multiple Cell
2.5Klb-5Klb: OIML MAA C5, Y=26 000;
10K-20Klb: OIML MAA C6, Y=8 500

For further available P/N's & specifications per NTEP/OIML classes, please contact us.

INTERCHANGEABLE REFERENCE

Brand	Model
Cardinal	SB2500S
Cardinal	SB5000S
Cardinal	SB10000S
Cardinal	SB20000S
Coti Global	CG-SB250
Rice Lake	RLSB250*

** Rice Lake RLSB250 is through hole design.*

www.anyload.com
© 2025 ANYLOAD V1 dimensions and specifications subject to change without notice

102AH

ANYLOAD

Alloy Steel

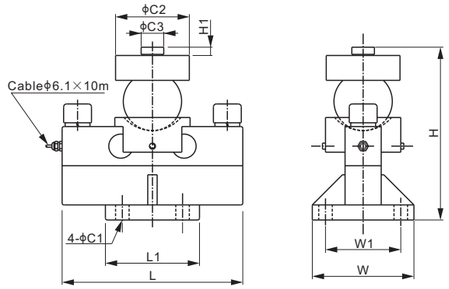

RoHS

Mounting hardware shown in the picture included.

DIMENSIONS

RATED CAPACITY	C1	C2	C3	H	H1	L	L1	W	W1
t/mm									
5–15	18.0	88.0	30.0	195.0	11.0	240.0	125.0	135.0	100.0
20–30	18.0	88.0	30.0	225.0	11.0	240.0	125.0	135.0	100.0
50	22.0	98.0	40.0	267.0	11.0	340.0	160.0	160.0	124.0
lb/inches (conversion of above dimensions)									
11,023.1–33,069.3	0.71	3.46	1.18	7.68	0.43	9.45	4.92	5.31	3.94
44,092.5–66,138.7	0.71	3.46	1.18	8.87	0.43	9.45	4.92	5.31	3.94
110,231.1	0.87	3.86	1.57	10.52	0.43	13.39	6.30	6.30	4.88

SPECIFICATIONS

Full Scale Output	2.0 mV/V ± 0.25%	**Recommended Excitation**	10V (15V Maximum)
Zero Balance	± 0.02 mV/V	**Insulation Resistance**	>2 [50V DC] GΩ
Non-linearity	< ± 0.023%	**Compensated Temperature Range**	-10°C to 50°C / 14°F to 122°F
Repeatability	< ± 0.017%	**Safe Overload**	150% of full scale
Hysteresis Error	< ± 0.023%	**Breaking Overload**	300% of full scale
Creep in 30 min.	< ± 0.023%	**Seal Type / IP Rating**	Environmentally Sealed / IP67
Input Resistance	770Ω ± 30	**Cable Color Code**	Exc+ Red Exc- Black Sig+ Green Sig- White Shield Bare
Output Resistance	700Ω ± 5		
Element Material	Alloy Steel, Nickel Plated		

PART NUMBER*

Rated Capacity	Part No.	Weight Approx. (kg)
5t	102AH-5t	16.4
10t	102AH-10t	16.4
15t	102AH-15t	16.4
20t	102AH-20t	16.7
25t	102AH-25t	16.7
30t	102AH-30t	16.7
50t	102AH-50t	30.7

* ATEX, FM, IECEx approved versions carry the "-Ex" suffix.

DOUBLE ENDED BEAMS

www.anyload.com
© 2025 ANYLOAD V1 dimensions and specifications subject to change without notice

ANYLOAD

102BH

Alloy Steel

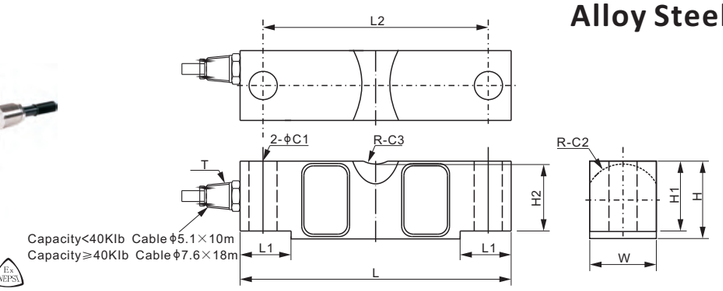

RoHS

DIMENSIONS

RATED CAPACITY	C1	C2	C3	H	H1	H2	L	L1	L2	W	T
Klb/inches											
10–25	0.68	0.90	0.75	1.94	1.70	1.63	7.75	1.38	6.50	1.69	1/4–18 NPT
40	0.81	1.12	0.98	2.44	2.10	2.03	10.25	1.93	8.50	1.94	1/2–14 NPT
50–75	1.06	1.38	0.98	2.94	2.65	2.53	10.25	1.93	8.50	2.44	1/2–14 NPT
SE100	1.06	1.38	0.98	3.44	2.65	2.53	10.25	1.93	8.50	2.44	1/2–14 NPT
100–125	1.62	1.80	1.50	3.86	3.43	3.30	15.25	3.13	12.75	2.90	1/2–14 NPT
200	1.62	2.37	2.00	5.80	5.12	4.44	19.25	4.00	15.25	3.80	1/2–14 NPT
300	2.12	4.00	2.50	5.80	5.12	4.44	22.00	5.00	17.00	5.80	1/2–14 NPT
400	2.12	5.00	3.00	5.80	5.12	4.44	22.00	5.00	17.00	5.80	1/2–14 NPT
t/mm											
5–15	17.3	22.9	19.1	49.3	43.2	41.5	196.9	35.1	165.1	42.9	1/4–18 NPT
20	20.5	28.4	25.0	62.0	53.4	51.6	260.4	49.0	216.0	49.3	1/4–18 NPT
25–35	27.0	35.0	25.0	74.6	67.2	64.3	260.4	49.0	216.0	62.0	1/2–14 NPT
50	41.2	45.7	38.1	98.0	87.1	83.8	387.4	79.5	323.9	73.7	1/2–14 NPT

SPECIFICATIONS

Full Scale Output	3.0 mV/V ± 0.25%	**Recommended Excitation**	10V (15V Maximum)
Zero Balance	± 0.02 mV/V	**Insulation Resistance**	>2 [50V DC] GΩ
Non-linearity	< ± 0.023%	**Compensated Temperature Range**	-10°C to 50°C / 14°F to 122°F
Repeatability	< ± 0.017%	**Safe Overload**	150% of full scale
Hysteresis Error	< ± 0.023%	**Breaking Overload**	300% of full scale
Creep in 30 min.	< ± 0.023%	**Seal Type / IP Rating**	Environmentally Sealed / IP67
Input Resistance	700Ω ± 10	**Cable Color Code**	Exc+ Red Exc- Black Sig+ Green Sig- White Shield Bare
Output Resistance	700Ω ± 5		
Element Material	Alloy Steel, Nickel Plated		

PART NUMBER*

Rated Capacity	Part No.	Weight Approx. (kg)
10Klb	102BH-10Klb	2.9
20Klb	102BH-20Klb	3.0
25Klb	102BH-25Klb	3.0
40Klb	102BH-40Klb	7.0
50Klb	102BH-50Klb	9.0
60Klb	102BH-60Klb	9.0
75Klb	102BH-75Klb	9.0
SE100Klb	102BH-SE100Klb	10.0
100Klb	102BH-100Klb	20.5
125Klb	102BH-125Klb	20.5
200Klb	102BH-200Klb	47.0
300Klb	102BH-300Klb	75.0
400Klb	102BH-400Klb	80.5
Weld Seal (IP68) & Lightning Protection Version:		
60Klb	102BH-60Klb-02	9.0
75Klb	102BH-75Klb-02	9.0

SE refers to small envelope

* ATEX, FM, IECEx approved versions carry the "-Ex" suffix.

WEIGH MODULE

Model	Page
102BHM1	144

PART NUMBER*

Rated Capacity	Part No.	Weight Approx. (kg)
5t	102BH-5t	3.0
10t	102BH-10t	3.0
15t	102BH-15t	3.0
20t	102BH-20t	7.0
25t	102BH-25t	9.0
30t	102BH-30t	9.0
35t	102BH-35t	9.0
50t	102BH-50t	20.5

INTERCHANGEABLE REFERENCE

Brand	Model
Artech	70310
Coti Global	CG-58
Rice Lake	RL75058
Vishay Celtron	CLB
Vishay Revere Transducers	5303
Vishay Sensortronics	65058A*
Vishay Tedea-Huntleigh	4158

** Sensortronics 65058A has SE50Klb and 50Klb.*

25Klb-125Klb: NTEP 1:10 000 Class IIIL, Multiple Cell

11t-55t: OIML MAA C3, Y=7500

For further available P/N's & specifications per NTEP/OIML classes, please contact us.

DOUBLE ENDED BEAMS

www.anyload.com
© 2025 ANYLOAD V1 dimensions and specifications subject to change without notice

102BS

ANYLOAD

Stainless Steel

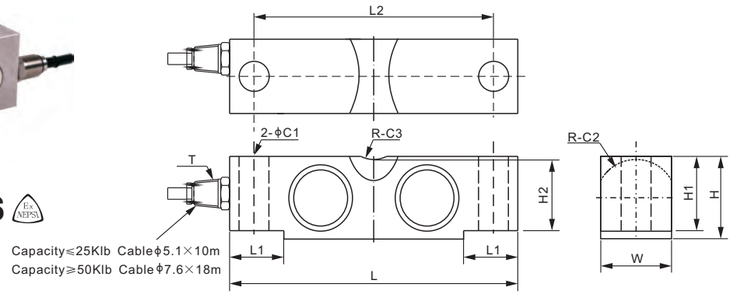

DOUBLE ENDED BEAMS

DIMENSIONS

RATED CAPACITY	C1	C2	C3	H	H1	H2	L	L1	L2	W	T
Klb/inches											
10–25	0.68	0.90	0.75	1.94	1.70	1.63	7.75	1.38	6.50	1.69	1/4–18 NPT
50–75	1.06	1.37	1.00	2.94	2.65	2.55	10.25	1.93	8.50	2.44	1/2–14 NPT
kg/mm (conversion of above dimensions)											
4,535.9–11,339.8	17.3	22.9	19.1	49.3	43.2	41.3	196.9	35.1	165.1	42.9	1/4–18 NPT
22.679.6–34,019.4	27.0	34.8	25.4	74.7	67.3	64.8	260.4	48.9	215.9	62.0	1/2–14 NPT

SPECIFICATIONS

Full Scale Output	3.0 mV/V ± 0.25%	**Recommended Excitation**	10V (15V Maximum)
Zero Balance	± 0.02 mV/V	**Insulation Resistance**	>2 [50V DC] GΩ
Non-linearity	< ± 0.030%	**Compensated Temperature Range**	-10°C to 50°C / 14°F to 122°F
Repeatability	< ± 0.017%	**Safe Overload**	150% of full scale
Hysteresis Error	< ± 0.023%	**Breaking Overload**	300% of full scale
Creep in 30 min.	< ± 0.023%	**Seal Type / IP Rating**	Welded Seal / IP68
Input Resistance	700Ω ± 10	**Cable Color Code**	Exc+ Red Exc- Black Sig+ Green Sig- White Shield Bare
Output Resistance	700Ω ± 5		
Element Material	2Cr13 Stainless Steel		

PART NUMBER*

Rated Capacity	Part No.	Weight Approx. (kg)
10Klb	102BS-10Klb-YZ	2.9
20Klb	102BS-20Klb-YZ	2.9
25Klb	102BS-25Klb-YZ	2.9
50Klb	102BS-50Klb-YZ	8.0
60Klb	102BS-60Klb-YZ	8.0
75Klb	102BS-75Klb-YZ	8.0

* ATEX, FM, IECEx approved versions carry the "-Ex" suffix.

25Klb-125Klb: NTEP 1:10 000 Class IIIL, Multiple Cell

11t-55t: OIML MAA C5, Y=15 000

For further available P/N's & specifications per NTEP/OIML classes, please contact us.

INTERCHANGEABLE REFERENCE

Brand	Model
Artech	SS70310
Coti Global	CG-58-SSW
Rice Lake	RL75060S
Vishay Revere Transducers	9303
Vishay Sensortronics	65058S

WEIGH MODULE

Model	Page
102BSM5	147

© 2025 ANYLOAD V1 dimensions and specifications subject to change without notice

ANYLOAD

102EHEL

Alloy Steel

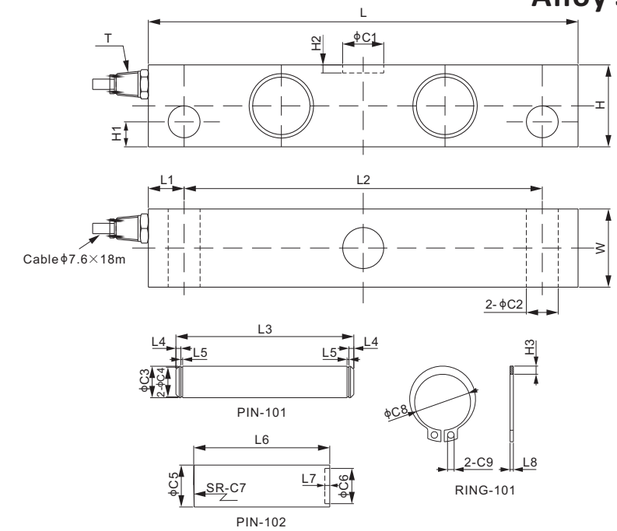

Mounting hardware to be ordered separately.

DOUBLE ENDED BEAMS

DIMENSIONS

RATED CAPACITY	C1	C2	C3	C4	C5	C6	C7	C8	C9	H	H1	H2	H3	L	L1	L2	L3	L4	L5	L6	L7	L8	W	T
Klb/inches																								
40–50	1.00	0.78	0.75	0.71	1.0	0.84	12.0	0.67	0.08	2.00	0.61	0.20	0.09	10.50	0.87	8.75	4.25	0.12	0.04	3.25	0.12	0.04	1.91	1/4–18 NPT
kg/mm (conversion of above dimensions)																								
18,143.7–22,679.6	25.5	19.8	19.1	18.0	25.4	21.4	304.8	17.0	2.0	50.8	15.5	5.0	2.48	266.7	22.2	222.3	108.0	3.0	1.1	82.6	3.0	1.0	48.5	1/4–18 NPT

SPECIFICATIONS

Full Scale Output	3.0 mV/V ± 0.25%	**Recommended Excitation**	10V (15V Maximum)
Zero Balance	± 0.02 mV/V	**Insulation Resistance**	>2 [50V DC] GΩ
Non-linearity	< ± 0.030%	**Compensated Temperature Range**	-10°C to 50°C / 14°F to 122°F
Repeatability	< ± 0.015%	**Safe Overload**	150% of full scale
Hysteresis Error	< ± 0.020%	**Breaking Overload**	300% of full scale
Creep in 30 min.	< ± 0.020%	**Seal Type / IP Rating**	Environmentally Sealed / IP67
Input Resistance	700Ω ± 10	**Cable Color Code**	Exc+ Red Exc- Black Sig+ Green Sig- White Shield Bare
Output Resistance	700Ω ± 5		
Element Material	Alloy Steel, Nickel Plated		

PART NUMBER*

Load Cell

Rated Capacity	Part No.	Weight Approx. (kg)
40Klb	102EHEL-40Klb	5.4
50Klb	102EHEL-50Klb	5.4

Mounting Hardware

Mounting Hardware	Part No.	Weight Approx. (kg)
Mounting Kit*	102EHEL-(40-50)Klb-PARTS	0.8

** Mounting kit includes: 2 × PIN-101, 1 × PIN-102, 4 × RING-101.*

* ATEX, FM, IECEx approved versions carry the "-Ex" suffix.

INTERCHANGEABLE REFERENCE

Brand	Model
Coti Global	CG-STR
Epelsa	STR

© 2025 ANYLOAD V1 dimensions and specifications subject to change without notice

102DH

ANYLOAD

Alloy Steel

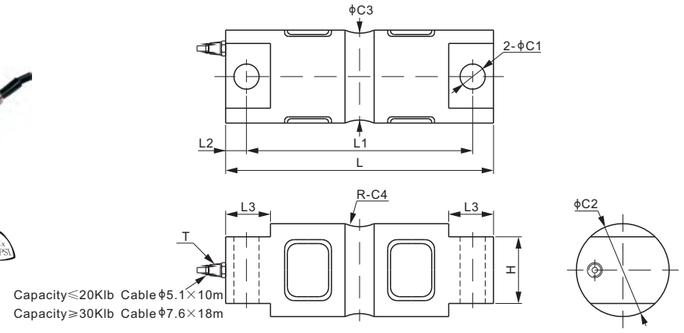

DOUBLE ENDED BEAMS

DIMENSIONS

RATED CAPACITY	C1	C2	C3	C4	H	L	L1	L2	L3	T
Klb/inches										
5-20	0.66	1.95	1.48	0.50	1.12	8.12	6.87	0.62	1.44	1/4-18 NPT
30-75	1.06	3.00	2.73	1.00	2.37	10.25	8.50	0.88	1.88	1/2-14 NPT
100	1.06	3.50	3.24	1.50	2.50	11.25	9.50	0.88	1.88	1/2-14 NPT
150	1.06	3.90	3.64	1.50	2.80	11.25	9.50	0.88	1.88	1/2-14 NPT
200-250	1.56	5.38	5.17	2.00	4.60	16.10	13.0	1.55	3.05	1/2-14 NPT
kg/mm(conversion of above dimensions)										
2,268-9,071.8	16.7	49.5	37.6	12.7	28.4	206.2	174.6	15.8	36.6	1/4-18 NPT
13,607.7-34,019.4	26.9	76.2	69.3	25.4	60.2	260.4	215.9	22.3	47.8	1/2-14 NPT
45,359.2	26.9	88.9	82.3	38.1	63.5	285.8	241.3	22.3	47.8	1/2-14 NPT
68,038.9	26.9	99.1	92.5	38.1	71.1	285.8	241.3	22.3	47.8	1/2-14 NPT
90,718.5-113,398.1	39.6	136.7	131.3	50.8	116.8	408.9	330.2	39.4	77.5	1/2-14 NPT

SPECIFICATIONS

Full Scale Output	3.0 mV/V ± 0.25%	**Recommended Excitation**	10V (15V Maximum)
Zero Balance	± 0.02 mV/V	**Insulation Resistance**	>2 [50V DC] GΩ
Non-linearity	< ± 0.023%	**Compensated Temperature Range**	-10°C to 50°C / 14°F to 122°F
Repeatability	< ± 0.017%	**Safe Overload**	150% of full scale
Hysteresis Error	< ± 0.023%	**Breaking Overload**	300% of full scale
Creep in 30 min.	< ± 0.023%	**Seal Type / IP Rating**	Environmentally Sealed / IP67
Input Resistance	700Ω ± 10	**Cable Color Code**	Exc+ Red Exc- Black Sig+ Green Sig- White Shield Bare
Output Resistance	700Ω ± 5		
Element Material	Alloy Steel, Nickel Plated		

PART NUMBER*

Rated Capacity	Part No.	Weight Approx. (kg)
5Klb	102DH-5Klb	2.4
10Klb	102DH-10Klb	2.7
15Klb	102DH-15Klb	2.7
20Klb	102DH-20Klb	2.7
30Klb	102DH-30Klb	9.0
40Klb	102DH-40Klb	9.0
50Klb	102DH-50Klb	9.0
60Klb	102DH-60Klb	9.0
75Klb	102DH-75Klb	9.0
100Klb	102DH-100Klb	12.1
150Klb	102DH-150Klb	18.3
200Klb	102DH-200Klb	38.0
250Klb	102DH-250Klb	38.0

* ATEX, FM, IECEx approved versions carry the "-Ex" suffix.

WEIGH MODULE

Model	Page
102DHM3	148

INTERCHANGEABLE REFERENCE

Brand	Model
Artech	70210
Coti Global	CG-5103
Rice Lake	RL70000
Rice Lake	RL72020*
Mettler Toledo	SLD430**
Vishay Revere Transducers	5103
Vishay Sensortronics	60058

: C2 of 5-10Klb:1.7", 30-60Klb:3.2"
***: C2 of 5-10Klb:1.7", 30-60Klb:3.0"*

10Klb-100Klb: NTEP 1:10 000 Class IIIL, Multiple Cell

9t-45t: OIML MAA C4, Y=15 000

For further available P/N's & specifications per NTEP/OIML classes, please contact us.

© 2025 ANYLOAD V1 dimensions and specifications subject to change without notice

ANYLOAD

102DS

Stainless Steel

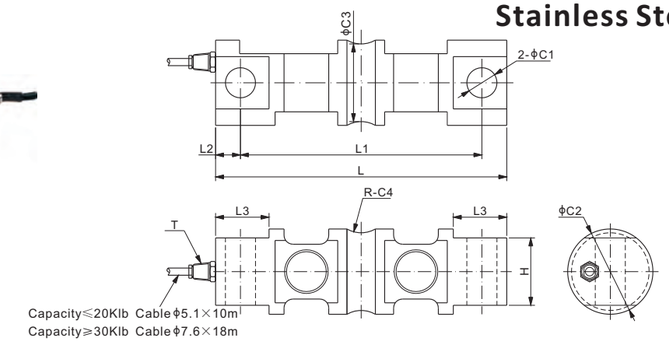

DOUBLE ENDED BEAMS

DIMENSIONS

RATED CAPACITY	C1	C2	C3	C4	H	L	L1	L2	L3	T
Klb/inches										
5-20	0.66	1.95	1.48	0.50	1.12	8.12	6.88	0.62	1.44	1/4-18 NPT
30-75	1.06	3.00	2.73	1.00	2.37	10.25	8.50	0.88	1.88	1/2-14 NPT
100	1.06	3.50	3.24	1.50	2.50	11.25	9.50	0.88	1.88	1/2-14 NPT
150	1.06	3.90	3.64	1.50	2.80	11.25	9.50	0.88	1.88	1/2-14 NPT
200	1.56	5.38	5.17	2.00	4.60	16.10	13.0	1.55	3.05	1/2-14 NPT
kg/mm(conversion of above dimensions)										
2,268-9,071.8	16.7	49.5	37.6	12.7	28.5	206.2	174.8	15.7	36.6	1/4-18 NPT
13,607.7-34,019.4	26.9	76.2	69.3	25.4	60.2	260.4	215.9	22.3	47.8	1/2-14 NPT
45,359.2	26.9	88.9	82.3	38.1	63.5	285.8	241.3	22.3	47.8	1/2-14 NPT
68,038.9	26.9	99.1	92.5	38.1	71.1	285.8	241.3	22.3	47.8	1/2-14 NPT
90,718.5	39.6	136.7	131.3	50.8	116.8	408.9	330.2	39.4	77.5	1/2-14 NPT

SPECIFICATIONS

Full Scale Output	3.0 mV/V ± 0.25%	**Recommended Excitation**	10V (15V Maximum)
Zero Balance	± 0.02 mV/V	**Insulation Resistance**	>2 [50V DC] GΩ
Non-linearity	< ± 0.023%	**Compensated Temperature Range**	-10°C to 50°C / 14°F to 122°F
Repeatability	< ± 0.017%	**Safe Overload**	150% of full scale
Hysteresis Error	< ± 0.023%	**Breaking Overload**	300% of full scale
Creep in 30 min.	< ± 0.023%	**Seal Type / IP Rating**	Welded Seal / IP68
Input Resistance	700Ω ± 10	**Cable Color Code**	Exc+ Red Exc- Black Sig+ Green Sig- White Shield Bare
Output Resistance	700Ω ± 5		
Element Material	17-4PH Stainless Steel		

PART NUMBER*

Rated Capacity	Part No.	Weight Approx. (kg)
5Klb	102DS-5Klb	2.4
10Klb	102DS-10Klb	2.7
15Klb	102DS-15Klb	2.7
20Klb	102DS-20Klb	2.7
30Klb	102DS-30Klb	9.0
40Klb	102DS-40Klb	9.0
50Klb	102DS-50Klb	9.0
60Klb	102DS-60Klb	9.0
75Klb	102DS-75Klb	9.0
100Klb	102DS-100Klb	12.1
150Klb	102DS-150Klb	18.3
200Klb	102DS-200Klb	38.0

* ATEX, FM, IECEx approved versions carry the "-Ex" suffix.

WEIGH MODULE

Model	Page
102DSM3	149

INTERCHANGEABLE REFERENCE

Brand	Model
Artech	SS70210
Coti Global	CG-5103-SSW
Mettler Toledo	SLD-530
Rice Lake	RL70000SS
Rice Lake	RL72019SS
Rice Lake	RL72020SS
Vishay Revere Transducers	9103

© 2025 ANYLOAD V1 dimensions and specifications subject to change without notice

102EH

ANYLOAD

Alloy Steel

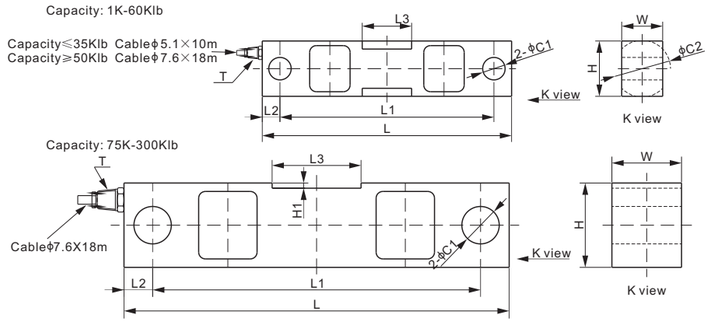

CE ATEX FM APPROVED IECEx RoHS EAC NEPSI

DOUBLE ENDED BEAMS

DIMENSIONS

RATED CAPACITY	C1	C2	H	H1	L	L1	L2	L3	W	T
Klb/inches										
1–5	0.50	1.26	1.26	–	7.50	6.25	0.62	1.22	1.26	1/4–18 NPT
10–25	0.79	1.99	1.94	–	8.74	7.50	0.62	1.73	1.44	1/4–18 NPT
35	0.79	2.50	2.50	–	8.74	7.50	0.62	1.73	1.50	1/4–18 NPT
50–60	1.31	2.99	2.95	–	13.50	11.50	1.00	3.15	2.44	1/2–14 NPT
75	1.31	–	2.95	0.18	13.50	11.50	1.00	3.11	2.44	1/2–14 NPT
100–125	1.63	–	3.94	0.25	18.50	15.00	1.75	3.25	2.94	1/2–14 NPT
200	2.13	–	5.79	0.50	20.50	17.00	1.75	4.13	3.80	1/2–14 NPT
300	2.63	–	5.79	0.50	23.50	18.74	2.38	5.13	3.80	1/2–14 NPT
kg/mm (conversion of above dimensions)										
453.6–2,268	12.7	32.0	32.0	–	190.5	158.8	15.9	31.0	32.0	1/4–18 NPT
4,535.9–11,339.8	20.0	50.5	49.2	–	222.0	190.5	15.8	44.0	36.5	1/4–18 NPT
15,875.7	20.0	63.5	63.5	–	222.0	190.5	15.8	44.0	38.1	1/4–18 NPT
22,679.6–27,215.5	33.3	76.0	75.0	–	343.0	292.0	25.5	80.0	62.0	1/2–14 NPT
34,019.4	33.3	–	75.0	4.6	343.0	292.0	25.5	79.2	62.0	1/2–14 NPT
45,359.2–56,699	41.4	–	100.0	6.4	470.0	381.0	44.5	82.6	74.7	1/2–14 NPT
90,718.5	54.0	–	147.0	12.7	520.7	431.7	44.5	105.0	96.5	1/2–14 NPT
136,077.7	66.8	–	147.0	12.7	597.0	476.0	60.5	130.3	96.5	1/2–14 NPT

SPECIFICATIONS

Full Scale Output	3.0 mV/V ± 0.25%	**Recommended Excitation**	10V (15V Maximum)
Zero Balance	± 0.02 mV/V	**Insulation Resistance**	>2 [50V DC] GΩ
Non-linearity	Cap.≤125Klb: < ± 0.050%; Cap.≥200Klb: < ± 0.1%	**Compensated Temperature Range**	-10˚C to 50˚C / 14˚F to 122˚F
Repeatability	< ± 0.030%	**Safe Overload**	150% of full scale
Hysteresis Error	Cap.≤125Klb: < ± 0.030%; Cap.≥200Klb: < ± 0.1%	**Breaking Overload**	300% of full scale
Creep in 30 min.	< ± 0.030%	**Seal Type / IP Rating**	Environmentally Sealed / IP67
Input Resistance	700Ω ± 10	**Cable Color Code**	Exc+ Red Exc- Black Sig+ Green Sig- White Shield Bare
Output Resistance	700Ω ± 5		
Element Material	Alloy Steel, Nickel Plated		

PART NUMBER*

Rated Capacity	Part No.	Weight Approx. (kg)
1Klb	102EH-1Klb	1.7
1.5Klb	102EH-1.5Klb	1.7
2.5Klb	102EH-2.5Klb	1.7
5Klb	102EH-5Klb	1.7
10Klb	102EH-10Klb	2.9
15Klb	102EH-15Klb	2.9
20Klb	102EH-20Klb	2.9
25Klb	102EH-25Klb	2.9
35Klb	102EH-35Klb	3.9
50Klb	102EH-50Klb	11.3
60Klb	102EH-60Klb	11.3
75Klb	102EH-75Klb	11.3
100Klb	102EH-100Klb	23.0
125Klb	102EH-125Klb	23.0
200Klb	102EH-200Klb	48.0
300Klb	102EH-300Klb	50.0

* ATEX, FM, IECEx approved versions carry the "-Ex" suffix.

WEIGH MODULE

Model	Page
102EHM2	150

INTERCHANGEABLE REFERENCE

Brand	Model
Artech	70510
Coti Global	CG-16
Rice Lake	RL75016
Mettler Toledo	SLD425
Vishay Celtron	DSR
Vishay Revere Transducers	5203
Vishay Sensortronics	65016

www.anyload.com
© 2025 ANYLOAD V1 dimensions and specifications subject to change without notice

ANYLOAD

102ES

Stainless Steel

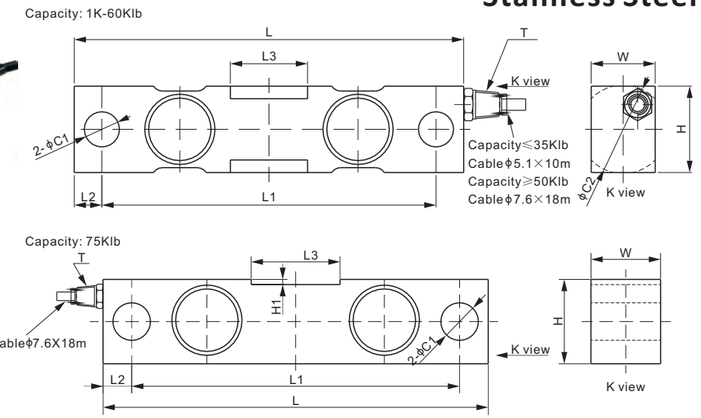

CE ATEX FM APPROVED IECEx RoHS EAC NEPSI

DOUBLE ENDED BEAMS

DIMENSIONS

RATED CAPACITY	C1	C2	H	H1	L	L1	L2	L3	W	T
Klb/inches										
2.5–5	0.50	1.26	1.26	–	7.50	6.25	0.62	1.22	1.26	1/4–18 NPT
10–25	0.79	1.99	1.94	–	8.74	7.50	0.62	1.73	1.44	1/4–18 NPT
35	0.79	2.50	2.50	–	8.74	7.50	0.62	1.73	1.50	1/4–18 NPT
50–60	1.31	2.99	2.95	–	13.50	11.50	1.00	3.15	2.44	1/2–14 NPT
75	1.31	–	2.95	0.18	13.50	11.50	1.00	3.11	2.44	1/2–14 NPT
kg/mm (conversion of above dimensions)										
1,134–2,268	12.7	32.0	32.0	–	190.5	158.8	15.9	31.0	32.0	1/4–18 NPT
4,535.9–11,339.8	20.0	50.5	49.2	–	222.0	190.5	15.8	44.0	36.5	1/4–18 NPT
15,875.7	20.0	63.5	63.5	–	222.0	190.5	15.8	44.0	38.1	1/4–18 NPT
22,679.6–27,215.5	33.3	76.0	75.0	–	343.0	292.0	25.5	80.0	62.0	1/2–14 NPT
34,019.4	33.3	–	75.0	4.6	343.0	292.0	25.5	79.2	62.0	1/2–14 NPT

SPECIFICATIONS

Full Scale Output	3.0 mV/V ± 0.25%	**Recommended Excitation**	10V (15V Maximum)
Zero Balance	± 0.02 mV/V	**Insulation Resistance**	>2 [50V DC] GΩ
Non-linearity	< ± 0.050%	**Compensated Temperature Range**	-10˚C to 50˚C / 14˚F to 122˚F
Repeatability	< ± 0.030%	**Safe Overload**	150% of full scale
Hysteresis Error	< ± 0.030%	**Breaking Overload**	300% of full scale
Creep in 30 min.	< ± 0.030%	**Seal Type / IP Rating**	Welded Seal / IP68
Input Resistance	700Ω ± 10	**Cable Color Code**	Exc+ Red Exc- Black Sig+ Green Sig- White Shield Bare
Output Resistance	700Ω ± 5		
Element Material	17-4PH Stainless Steel		

PART NUMBER*

Rated Capacity	Part No.	Weight Approx. (kg)
2.5Klb	102ES-2.5Klb	1.7
5Klb	102ES-5Klb	1.7
10Klb	102ES-10Klb	2.9
15Klb	102ES-15Klb	2.9
25Klb	102ES-25Klb	2.9
35Klb	102ES-35Klb	3.6
50Klb	102ES-50Klb	10.5
60Klb	102ES-60Klb	10.5
75Klb	102ES-75Klb	10.5

* ATEX, FM, IECEx approved versions carry the "-Ex" suffix.

WEIGH MODULE

Model	Page
102ESM2	152

INTERCHANGEABLE REFERENCE

Brand	Model
Artech	SS70510
Coti Global	CG-16-SSW
Rice Lake	RL75016SS
Rice Lake	RL75016WHE*
Mettler Toledo	SLD525
Vishay Celtron	DSR-SS
Vishay Revere Transducers	9203
Vishay Sensortronics	65016W
Vishay Sensortronics	65016WH*

** Hermetically sealed.*

www.anyload.com
© 2025 ANYLOAD V1 dimensions and specifications subject to change without notice

102FS

ANYLOAD

Stainless Steel

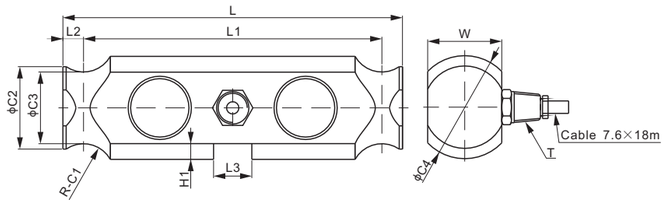

DOUBLE ENDED BEAMS

DIMENSIONS

RATED CAPACITY	C1	C2	C3	C4	H1	L	L1	L2	L3	W	T
Klb/inches											
50; 75	0.75	2.00	1.96	2.50	0.38	8.25	7.25	0.50	0.93	1.80	1/2-14 NPT
kg/mm (conversion of above dimensions)											
22,679.9; 34,019.8	19.0	50.8	44.7	63.5	9.7	209.6	184.2	12.7	23.6	45.7	1/2-14 NPT

SPECIFICATIONS

Full Scale Output	2.0 mV/V ± 0.25%	**Recommended Excitation**	10V (15V Maximum)
Zero Balance	± 0.02 mV/V	**Insulation Resistance**	>2 [50V DC] GΩ
Non-linearity	< ± 0.030%	**Compensated Temperature Range**	-10°C to 50°C / 14°F to 122°F
Repeatability	< ± 0.017%	**Safe Overload**	150% of full scale
Hysteresis Error	< ± 0.023%	**Breaking Overload**	300% of full scale
Creep in 30 min.	< ± 0.023%	**Seal Type / IP Rating**	Welded Seal / IP68
Input Resistance	700Ω ± 10	**Cable Color Code**	Exc+ Red Exc- Black
Output Resistance	700Ω ± 5		Sig+ Green Sig- White
Element Material	2Cr13 Stainless Steel		Shield Bare

PART NUMBER*

Rated Capacity	Part No.	Weight Approx. (kg)
50Klb	102FS-50Klb-YZ	5.4
75Klb	102FS-75Klb-YZ	5.8

* ATEX, FM, IECEx approved versions carry the "-Ex" suffix.

50Klb-75Klb: NTEP 1:10 000 Class IIIL, Multiple Cell

11t-55t: OIML MAA C4.5, Y=18 000

For further available P/N's & specifications per NTEP/OIML classes, please contact us.

INTERCHANGEABLE REFERENCE

Brand	Model
Cardinal	DB50000S
Cardinal	DB75000S
Coti Global	CG-DB50000S
Rice Lake	RLDB50000S
Rice Lake	RLDB75000S

www.anyload.com
© 2025 ANYLOAD V1 dimensions and specifications subject to change without notice

ANYLOAD

102TH

Alloy Steel

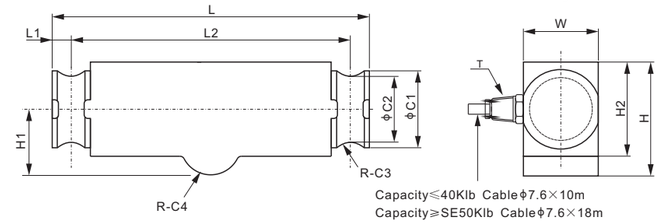

DOUBLE ENDED BEAMS

DIMENSIONS

RATED CAPACITY	C1	C2	C3	C4	H	H1	H2	L	L1	L2	W	T
Klb/inches												
25-40;SE50;SE60;SE75	2.00	1.63	0.50	0.50	2.97	1.75	2.44	8.25	0.50	7.25	1.94	1/2-14 NPT
50-75	2.20	1.70	0.75	1.00	3.47	2.00	2.94	11.50	0.75	10.00	1.94	1/2-14 NPT
100-125	3.20	2.44	1.00	1.50	4.68	2.75	3.86	14.50	1.00	12.50	2.90	1/2-14 NPT
t/mm (conversion of above dimensions)												
6.8-18.1;SE22.7;SE27.2;SE34	50.8	41.4	12.7	12.7	75.4	44.5	62.0	209.6	12.7	184.2	49.3	1/2-14 NPT
22.7-34	55.9	43.2	19.1	25.4	88.1	50.8	74.7	292.1	19.1	254.0	49.3	1/2-14 NPT
45.4-56.7	81.2	62.0	25.4	38.1	118.9	69.9	98.0	368.3	25.4	317.5	73.7	1/2-14 NPT

SPECIFICATIONS

Full Scale Output	3.0 mV/V ± 0.25%	**Recommended Excitation**	10V (15V Maximum)
Zero Balance	± 0.02 mV/V	**Insulation Resistance**	>2 [50V DC] GΩ
Non-linearity	< ± 0.023%	**Compensated Temperature Range**	-10°C to 50°C / 14°F to 122°F
Repeatability	< ± 0.017%	**Safe Overload**	150% of full scale
Hysteresis Error	< ± 0.023%	**Breaking Overload**	300% of full scale
Creep in 30 min.	< ± 0.023%	**Seal Type / IP Rating**	Environmentally Sealed / IP67
Input Resistance	700Ω ± 10	**Cable Color Code**	Exc+ Red Exc- Black
Output Resistance	700Ω ± 5		Sig+ Green Sig- White
Element Material	Alloy Steel, Nickel Plated		Shield Bare

PART NUMBER*

Rated Capacity	Part No.	Weight Approx. (kg)
25Klb	102TH-25Klb	4.9
40Klb	102TH-40Klb	5.2
SE50Klb	102TH-SE50Klb	6.0
SE60Klb	102TH-SE60Klb	6.0
SE75Klb	102TH-SE75Klb	6.1
50Klb	102TH-50Klb	8.3
60Klb	102TH-60Klb	8.3
75Klb	102TH-75Klb	8.5
100Klb	102TH-100Klb	21.1
125Klb	102TH-125Klb	21.1
Lightning Protection Version:		
75Klb	102TH-75Klb-02	8.5
Lightning Protection + Rodent Protection Cable 50ft Version:		
60Klb	102TH-60Klb-01-RP50ft	8.5

SE refers to small envelope

* ATEX, FM, IECEx approved versions carry the "-Ex" suffix.

NTEP 1:10 000 Class IIIL, Multiple Cell

11t-55t: OIML MAA C4, Y=15 000

For further available P/N's & specifications per NTEP/OIML classes, please contact us.

WEIGH MODULE

Model	Page
102THM5	153

INTERCHANGEABLE REFERENCE

Brand	Model
Artech	80310
Coti Global	CG-BE40
Rice Lake	RL75040
Vishay Celtron	DLB
Vishay Revere Transducers	9323*
Vishay Revere Transducers	9903**
Vishay Sensortronics	65040A

** Element material of 9323: stainless steel. Design capacities are 25Klb, 40Klb, SE50Klb, SE60Klb, SE75Klb.*
*** Element material of 9903: stainless steel. Design capacities are 50Klb, 60Klb, 75Klb.*

www.anyload.com
© 2025 ANYLOAD V1 dimensions and specifications subject to change without notice

102MH

ANYLOAD

Alloy Steel

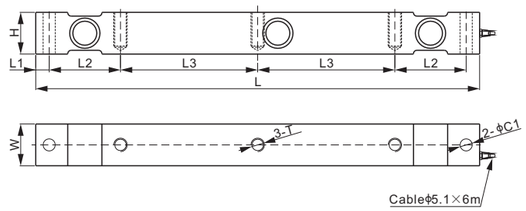

RoHS

DOUBLE ENDED BEAMS

DIMENSIONS

RATED CAPACITY	C1	H	L	L1	L2	L3	W	T
t/mm								
25	18.0	62.0	660	20.0	106	204	62.0	M20 Depth50
lb/inches (conversion of above dimensions)								
55,115	0.71	2.44	26.0	0.79	4.17	8.03	2.44	M20 Depth1.97

SPECIFICATIONS

Full Scale Output	2.0 mV/V ± 0.25%	**Recommended Excitation**	10V (15V Maximum)
Zero Balance	± 0.02 mV/V	**Insulation Resistance**	>2 [50V DC] GΩ
Non-linearity	< ± 0.030%	**Compensated Temperature Range**	-10°C to 50°C / 14°F to 122°F
Repeatability	< ± 0.017%	**Safe Overload**	150% of full scale
Hysteresis Error	< ± 0.023%	**Breaking Overload**	300% of full scale
Creep in 30 min.	< ± 0.023%	**Seal Type / IP Rating**	Welded Seal / IP67
Input Resistance	700Ω ± 10	**Cable Color Code**	Exc+ Red Exc- Black Sig+ Green Sig- White Shield Bare
Output Resistance	700Ω ± 5		
Element Material	Alloy Steel, Nickel Plated		

PART NUMBER*

Rated Capacity	Part No.	Weight Approx. (kg)
25t	102MH-25t	19.4

* ATEX, FM, IECEx approved versions carry the "-Ex" suffix.

www.anyload.com
© 2025 ANYLOAD V1 dimensions and specifications subject to change without notice

ANYLOAD

102MHML

Alloy Steel

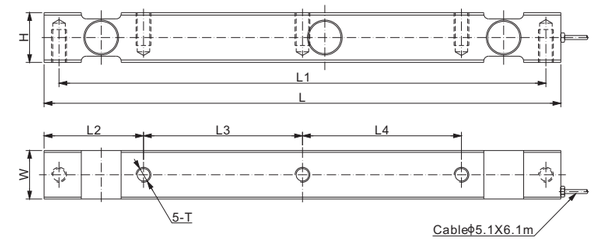

RoHS

DOUBLE ENDED BEAMS

DIMENSIONS

RATED CAPACITY	H	L	L1	L2	L3	L4	W	T
Klb/inches								
25	2.50	26.0	24.5	5.0	8.0	8.0	2.44	3/4-10 UNC-2B Depth 1.5
t/mm								
11.40	63.5	660.4	622.3	127.0	203.2	203.2	61.9	3/4-10 UNC-2B Depth 38.1

SPECIFICATIONS

Full Scale Output	2.0 mV/V ± 0.25%	**Recommended Excitation**	10V (15V Maximum)
Zero Balance	± 0.02 mV/V	**Insulation Resistance**	>2 [50V DC] GΩ
Non-linearity	< ± 0.030%	**Compensated Temperature Range**	-10°C to 50°C / 14°F to 122°F
Repeatability	< ± 0.010%	**Safe Overload**	150% of full scale
Hysteresis Error	< ± 0.020%	**Breaking Overload**	300% of full scale
Creep in 30 min.	< ± 0.023%	**Seal Type / IP Rating**	Environmentally Sealed / IP67
Input Resistance	750Ω ± 15	**Cable Color Code**	Exc+ Red Exc- Black Sig+ Green Sig- White Shield Bare
Output Resistance	700Ω ± 3		
Element Material	Alloy Steel		

PART NUMBER*

Rated Capacity	Part No.	Shipping Weight Approx. (kg)
25Klb	102MHML-25Klb	18.8

* ATEX, FM, IECEx approved versions carry the "-Ex" suffix.

INTERCHANGEABLE REFERENCE

Brand	Model
Coti Global	CG-SLS*
Massload	ML1100

** Coti Global CG-SLS full scale output 2.0mV/V±0.1%*

www.anyload.com
© 2025 ANYLOAD V1 dimensions and specifications subject to change without notice

102RH

ANYLOAD

Alloy Steel

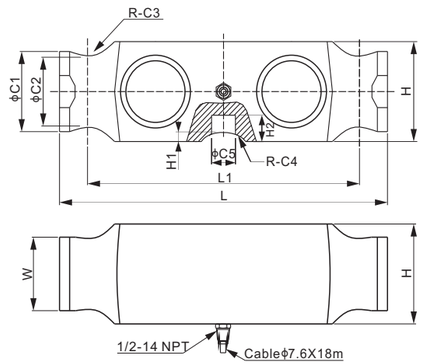

RoHS

DIMENSIONS

RATED CAPACITY	C1	C2	C3	C4	C5	H	H1	H2	L	L1	W
Klb/inches											
50–65	2.40	2.06	1.00	1.00	0.75	2.99	0.28	0.79	10.25	8.50	2.20
75–125	2.40	2.06	1.00	1.00	0.75	2.99	0.28	0.79	10.25	8.50	2.20
t/mm											
10; 15	40.0	30.0	19.0	19.0	16.0	49.3	5.7	13.7	220.0	170.0	36.0

SPECIFICATIONS

Full Scale Output	3.0 mV/V ± 0.25%	**Recommended Excitation**	10V (15V Maximum)
Zero Balance	± 0.02 mV/V	**Insulation Resistance**	>2 [50V DC] GΩ
Non-linearity	< ± 0.023%	**Compensated Temperature Range**	-10°C to 50°C / 14°F to 122°F
Repeatability	< ± 0.017%	**Safe Overload**	150% of full scale
Hysteresis Error	< ± 0.023%	**Breaking Overload**	300% of full scale
Creep in 30 min.	< ± 0.023%	**Seal Type / IP Rating**	Welded Seal / IP68
Input Resistance	700Ω ± 10	**Cable Color Code**	Exc+ Red Exc- Black Sig+ Green Sig- White Shield Bare
Output Resistance	700Ω ± 5		
Element Material	Alloy Steel, Nickel Plated		

PART NUMBER*

Rated Capacity	Part No.	Weight Approx. (kg)
10t	102RH-10t	4.0
15t	102RH-15t	4.0
50Klb	102RH-50Klb	8.6
65Klb	102RH-65Klb	8.6
75Klb	102RH-CH-75Klb	8.6
100Klb	102RH-CH-100Klb	8.6
125Klb	102RH-CH-125Klb	9.2

* No center hole version (noϕC5)

100Klb	102RH-100Klb	8.6
125Klb	102RH-125Klb	9.2

* Interchange with 100Klb of Rice Lake RL 75233 (no center hole) only.

* ATEX, FM, IECEx approved versions carry the "-Ex" suffix.

INTERCHANGEABLE REFERENCE

Brand	Model
Artech	80210
Coti Global	CG-5223
Rice Lake	RL75223
Vishay Revere Transducers	5223
Vishay Sensortronics	65040-1127W

50Klb-125Klb: NTEP 1:10 000 Class IIIL, Multiple Cell

11t-15t: OIML MAA C4, Y=15 000

For further available P/N's & specifications per NTEP/OIML classes, please contact us.

DOUBLE ENDED BEAMS

www.anyload.com
© 2025 ANYLOAD V1 dimensions and specifications subject to change without notice

ANYLOAD

102RHGT

Alloy Steel

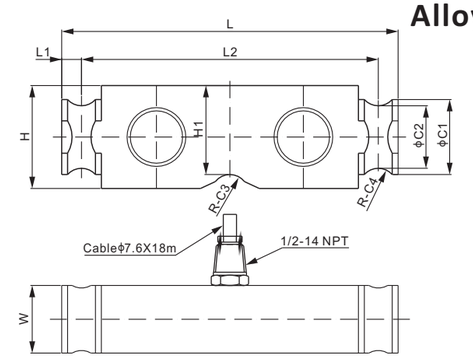

RoHS

DIMENSIONS

RATED CAPACITY	C1	C2	C3	C4	H	H1	L	L1	L2	W
Klb/inches										
60	2.01	1.67	0.50	0.50	2.76	2.38	9.02	0.53	7.95	1.81
kg/mm (conversion of above dimensions)										
27,200	51.0	42.5	12.7	12.7	70.0	60.5	229.0	13.5	202.0	46.0

SPECIFICATIONS

Full Scale Output	3.0 mV/V ± 0.25%	**Recommended Excitation**	10V (15V Maximum)
Zero Balance	± 0.02 mV/V	**Insulation Resistance**	>2 [50V DC] GΩ
Non-linearity	< ± 0.030%	**Compensated Temperature Range**	-10°C to 50°C / 14°F to 122°F
Repeatability	< ± 0.017%	**Safe Overload**	150% of full scale
Hysteresis Error	< ± 0.023%	**Breaking Overload**	300% of full scale
Creep in 30 min.	< ± 0.023%	**Seal Type / IP Rating**	Welded Seal / IP68
Input Resistance	700Ω ± 10	**Cable Color Code**	Exc+ Red Exc- Black Sig+ Green Sig- White Shield Bare
Output Resistance	700Ω ± 5		
Element Material	Alloy Steel, Nickel Plated		

PART NUMBER*

Rated Capacity	Part No.	Weight Approx. (kg)
60Klb	102RHGT-60Klb	6.4

* ATEX, FM, IECEx approved versions carry the "-Ex" suffix.

INTERCHANGEABLE REFERENCE

Brand	Model
BIM	SDB60Klb

DOUBLE ENDED BEAMS

www.anyload.com
© 2025 ANYLOAD V1 dimensions and specifications subject to change without notice

101AH

ANYLOAD

Alloy Steel

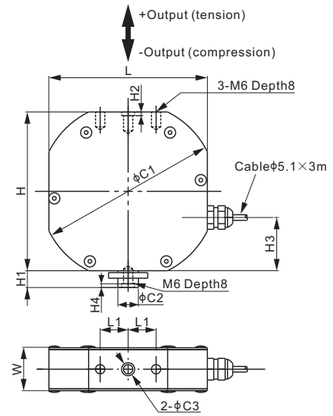

DIMENSIONS

RATED CAPACITY	C1	C2	C3	H	H1	H2	H3	H4	L	L1	W
kg/mm											
1–30	95.0	11.0	7.0	85.0	9.0	2.0	28.5	2.0	85.0	15.0	24.0
lb/inches (conversion of above dimensions)											
2.20–66.14	3.74	0.43	0.28	3.35	0.35	0.08	1.12	0.08	3.35	0.59	0.94

SPECIFICATIONS

Full Scale Output	2.0 mV/V ± 10%	**Recommended Excitation**	10V (15V Maximum)
Zero Balance	± 0.02 mV/V	**Insulation Resistance**	>2 [50V DC] GΩ
Non-linearity	< ± 0.017%	**Compensated Temperature Range**	-10°C to 50°C / 14°F to 122°F
Repeatability	< ± 0.017%	**Safe Overload**	150% of full scale
Hysteresis Error	< ± 0.017%	**Breaking Overload**	300% of full scale
Creep in 30 min.	< ± 0.023%	**Seal Type / IP Rating**	Environmentally Sealed / IP65
Input Resistance	400Ω ± 20	**Cable Color Code**	Exc+ Red Exc- Black Sig+ Green Sig- White Shield Bare
Output Resistance	350Ω ± 3		
Element Material	Alloy Steel, Nickel Plated		

PART NUMBER

Rated Capacity	Deflection Emax(mm)	Part No.	Weight Approx.(kg)
1kg	0.36-0.46	101AH-1kg	0.9
2kg	0.19-0.29	101AH-2kg	0.9
3kg	0.15-0.25	101AH-3kg	0.9
5kg	0.16-0.26	101AH-5kg	0.9
10kg	0.14-0.24	101AH-10kg	0.9
20kg	-	101AH-20kg	0.9
30kg	-	101AH-30kg	0.9

S-BEAMS

www.anyload.com
© 2025 ANYLOAD V1 dimensions and specifications subject to change without notice

ANYLOAD

101NSGS

Stainless Steel

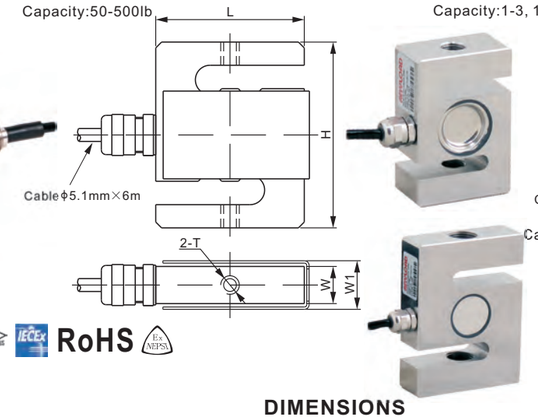

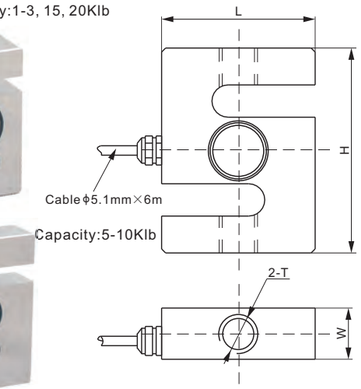

DIMENSIONS

RATED CAPACITY	H	L	W	W1	T
lb/inches					
50–250	2.50	2.00	0.50	0.65	1/4–28 UNF–2B
500	3.00	2.00	0.75	0.89	1/2–20 UNF–2B
1,000–3,000	3.00	2.00	1.11	–	1/2–20 UNF–2B
5,000; 10,000	4.00	3.00	1.00	–	3/4–16 UNF–2B
15,000	5.50	4.00	1.25	–	1–14 UNS–2B
20,000	7.00	5.00	2.00	–	$1\frac{1}{4}$–12 UNF–2B
kg/mm (conversion of above dimensions)					
22.68–113.4	63.5	50.8	12.7	16.6	1/4–28 UNF–2B
226.8	76.2	50.8	19.1	22.6	1/2–20 UNF–2B
453.6–1,360.8	76.2	50.8	28.2	–	1/2–20 UNF–2B
2,268; 4,535.9	101.6	76.2	25.4	–	3/4–16 UNF–2B
6,803.9	139.7	101.6	31.8	–	1–14 UNS–2B
9,071.8	177.8	127.0	50.8	–	$1\frac{1}{4}$–12 UNF–2B

SPECIFICATIONS

Full Scale Output	3.0 mV/V ± 1%	**Recommended Excitation**	10V (15V Maximum)
Zero Balance	± 0.02 mV/V	**Insulation Resistance**	>2 [50V DC] GΩ
Non-linearity	< ± 0.017%	**Compensated Temperature Range**	-10°C to 50°C / 14°F to 122°F
Repeatability	< ± 0.017%	**Safe Overload**	150% of full scale
Hysteresis Error	< ± 0.017%	**Breaking Overload**	300% of full scale
Creep in 30 min.	< ± 0.023%	**Seal Type / IP Rating**	Cap.≤500lb:Environmentally Sealed / IP66
Input Resistance	350Ω ± 7	**Cable Color Code**	Cap.≥1Klb:Environmentally Sealed / IP67
Output Resistance	350Ω ± 3		Exc+ Red Exc- Black
Element Material	17-4PH Stainless Steel		Sig+ Green Sig- White Shield Bare

PART NUMBER*

Rated Capacity	Deflection Emax(inch)	Part No.	Weight Approx.(lb)
50lb	-	101NSGS-50lb	1.1
100lb	-	101NSGS-100lb	1.1
250lb	-	101NSGS-250lb	1.1
500lb	-	101NSGS-500lb	1.5
1Klb	0.003-0.007	101NSGS-1Klb	1.8
1.5Klb	-	101NSGS-1.5Klb	1.8
2Klb	-	101NSGS-2Klb	1.8
2.5Klb	-	101NSGS-2.5Klb	1.8
3Klb	-	101NSGS-3Klb	1.8
5Klb	-	101NSGS-5Klb	2.9
10Klb	-	101NSGS-10Klb	2.9
15Klb	-	101NSGS-15Klb	6.6
20Klb	-	101NSGS-20Klb	15.0

* ATEX, FM, IECEx approved versions carry the "-Ex" suffix.

INTERCHANGEABLE REFERENCE

Brand	Model
Artech	SS20210
Coti Global	CGSB-SS
Mettler-Toledo	SLS510*
Rice Lake	RL20000 SS
Rice Lake	RL20000 ST
Vishay Celtron	STC-SS
Vishay Revere Transducers	9363
Vishay Sensortronics	60050

** SLS510's height of 500lb-2Klb: 2.40inch; 3Klb: 3.90inch. Thread of SLS 15Klb: 1-14 UNF-2B.*

100lb-500lb: up to NTEP 1:4 500 Class III, Single Cell;
1Klb-20Klb: up to NTEP 1:5 500 Class III, Single Cell
200kg-1.5t: up to OIML MAA C3, Y=17 000;
2t-10t: up to OIML MAA C4.5, Y=14 000
For further available P/N's & specifications per NTEP/OIML classes, please contact us.

S-BEAMS

www.anyload.com
© 2025 ANYLOAD V1 dimensions and specifications subject to change without notice

101BH

ANYLOAD

Alloy Steel

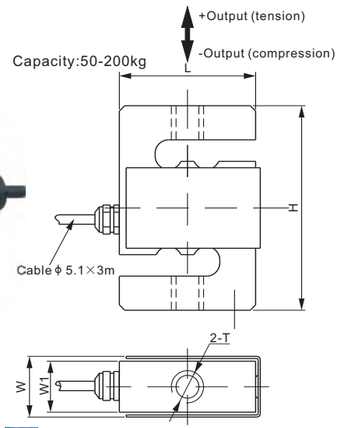

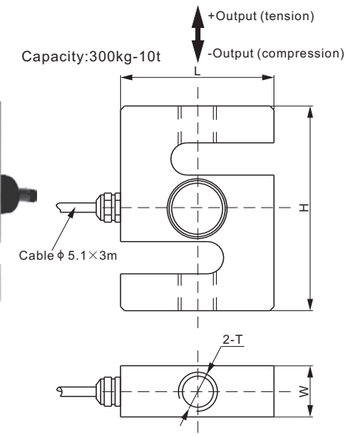

RoHS

DIMENSIONS

RATED CAPACITY	H	L	W	W1	T
kg/mm					
50–200	76.2	50.8	22.6	19.0	M12X1.75
300–1,500; SE2,000	76.2	50.8	28.2	–	M12X1.75
2,000–5,000	108.0	76.2	25.4	–	M18X1.50
10,000	177.8	125.0	50.8	–	M30X2.00
lb/inches (conversion of above dimensions)					
110.23–440.92	3.00	2.00	0.89	0.75	M12X1.75
661.39–3,306.9; SE4,409.2	3.00	2.00	1.11	–	M12X1.75
4,409.2–11,023.1	4.25	3.00	1.00	–	M18X1.50
22,046.2	7.00	4.92	2.00	–	M30X2.00

SPECIFICATIONS

Full Scale Output	2.0 mV/V ± 1%	**Recommended Excitation**	10V (15V Maximum)
Zero Balance	± 0.02 mV/V	**Insulation Resistance**	>2 [50V DC] GΩ
Non-linearity	< ± 0.017%	**Compensated Temperature Range**	-10°C to 50°C / 14°F to 122°F
Repeatability	< ± 0.017%	**Safe Overload**	150% of full scale
Hysteresis Error	< ± 0.017%	**Breaking Overload**	300% of full scale
Creep in 30 min.	< ± 0.023%	**Seal Type / IP Rating**	Cap.≤200kg: Environmentally Sealed / IP66
Input Resistance	400Ω ± 25		Cap.≥300kg: Environmentally Sealed / IP67
Output Resistance	350Ω ± 3	**Cable Color Code**	Exc+ Red Exc- Black
Element Material	Alloy Steel, Nickel Plated		Sig+ Green Sig- White Shield Bare

PART NUMBER*

Rated Capacity	Deflection Emax(mm)	Part No.	Weight Approx.(kg)
50kg	0.04-0.14	101BH-50kg	0.6
100kg	0.05-0.15	101BH-100kg	0.6
200kg	0.08-0.18	101BH-200kg	0.6
300kg	0.04-0.14	101BH-300kg	0.8
500kg	0.08-0.18	101BH-500kg	0.8
1t	0.17-0.27	101BH-1t	0.8
SE2t	-	101BH-SE2t	0.8
2t	0.17-0.27	101BH-2t	1.5
3t	0.25-0.35	101BH-3t	1.5
5t	0.35-0.45	101BH-5t	1.5
10t	0.29-0.39	101BH-10t	7.4

SE refers to small envelope

* ATEX, FM, IECEx approved versions carry the "-Ex" suffix.

WEIGH MODULE

Model	Page
101BHM2	142

INTERCHANGEABLE REFERENCE

Brand	Model
Vishay Tedea-Huntleigh	615

100lb-500lb: up to NTEP 1:4 500 Class III, Single Cell;
1Klb-20Klb: up to NTEP 1:5 500 Class III, Single Cell
200kg-1.5t: up to OIML MAA C3, Y=17 000;
2t-10t: up to OIML MAA C4.5, Y=14 000

For further available P/N's & specifications per NTEP/OIML classes, please contact us.

© 2025 ANYLOAD V1 dimensions and specifications subject to change without notice

ANYLOAD

101BS

Stainless Steel

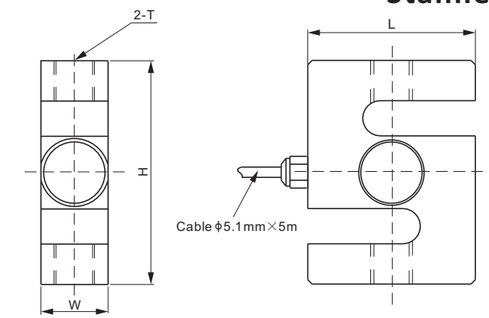

RoHS

DIMENSIONS

RATED CAPACITY	H	L	W	T
lb/inches				
500–3,000	3.00	2.00	1.11	1/2–20 UNF–2B
5,000	4.00	3.00	1.11	3/4–16 UNF–2B
10,000	4.00	3.00	1.25	3/4–16 UNF–2B
15,000	5.50	4.00	1.25	1–14 UNS–2B
20,000	7.00	5.00	2.00	$1\frac{1}{4}$–12 UNF–2B
kg/mm				
300–1,000	76.2	50.8	28.2	M12X1.75
2,000; 3,000	101.6	76.2	28.2	M16X2.00
5,000	101.6	76.2	31.8	M24X2.00
10,000	177.8	125.0	50.8	M30X2.00

SPECIFICATIONS

Full Scale Output	2.0 mV/V ± 1%	**Recommended Excitation**	10V (15V Maximum)
Zero Balance	± 0.02 mV/V	**Insulation Resistance**	>2 [50V DC] GΩ
Non-linearity	< ± 0.023%	**Compensated Temperature Range**	-10°C to 50°C / 14°F to 122°F
Repeatability	< ± 0.030%	**Safe Overload**	150% of full scale
Hysteresis Error	< ± 0.030%	**Breaking Overload**	300% of full scale
Creep in 30 min.	< ± 0.030%	**Seal Type / IP Rating**	Welded Seal / IP68
Input Resistance	400Ω ± 20	**Cable Color Code**	Exc+ Red Exc- Black
Output Resistance	350Ω ± 3		Sig+ Green Sig- White
Element Material	17-4PH Stainless Steel		Shield Bare

PART NUMBER*

Rated Capacity	Deflection (Emax)	Part No.	Weight Approx.
300kg	0.16-0.16mm	101BS-300kg	0.8kg
500kg	0.11-0.21mm	101BS-500kg	0.8kg
1t	0.23-0.33mm	101BS-1t	0.8kg
2t	0.20-0.30mm	101BS-2t	1.5kg
3t	0.30-0.40mm	101BS-3t	1.5kg
5t	0.35-0.45mm	101BS-5t	1.7kg
10t	-	101BS-10t	7.0kg
500lb	0.002-0.006in	101BS-500lb	1.8lb
1Klb	0.004-0.008in	101BS-1Klb	1.8lb
1.5Klb	0.006-0.010in	101BS-1.5Klb	1.8lb
2Klb	0.008-0.012in	101BS-2Klb	1.8lb
2.5Klb	0.010-0.014in	101BS-2.5Klb	1.8lb
3Klb	0.012-0.016in	101BS-3Klb	1.8lb
5Klb	0.009-0.013in	101BS-5Klb	3.3lb
10Klb	0.015-0.019in	101BS-10Klb	3.8lb
15Klb	-	101BS-15Klb	6.4lb
20Klb	0.014-0.018in	101BS-20Klb	15.4lb

* ATEX, FM, IECEx approved versions carry the "-Ex" suffix.

INTERCHANGEABLE REFERENCE

Brand	Model
Coti Global	CGSB-SSW
FLINTEC	ULB
HBM	RSC*
Rice Lake	RL20001HE
Vishay Celtron	STC HSS
Vishay Sensortronics	60063
Vishay Tedea-Huntleigh	616*
Vishay Tedea-Huntleigh	620

** Glue Sealed.*

100lb-500lb: up to NTEP 1:4 500 Class III, Single Cell;
1Klb-20Klb: up to NTEP 1:5 500 Class III, Single Cell
200kg-1.5t: up to OIML MAA C3, Y=17 000;
2t-10t: up to OIML MAA C4.5, Y=14 000

For further available P/N's & specifications per NTEP/OIML classes, please contact us.

© 2025 ANYLOAD V1 dimensions and specifications subject to change without notice

101NH

ANYLOAD

Alloy Steel

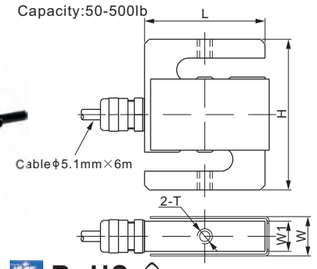

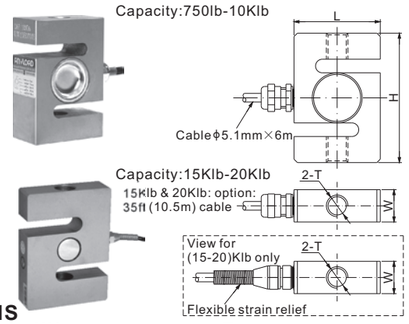

RoHS

DIMENSIONS

RATED CAPACITY	H	L	W	W1	T	Shipping Weight(lb)
lb/inches						
50-300	2.50	2.00	0.65	0.50	1/4-28 UNF-2B	1.3
500	3.00	2.00	0.89	0.75	1/2-20 UNF-2B	1.5
750-3,000	3.00	2.00	1.11	–	1/2-20 UNF-2B	2.0
5,000; 10,000	4.00	3.00	1.00	–	3/4-16 UNF-2B	3.3
15,000	5.50	4.00	1.25	–	1-14 UNS-2B	6.6
20,000	7.00	4.92	2.00	–	$1\frac{1}{4}$-12 UNF-2B	15.0

SPECIFICATIONS

Full Scale Output	3.0 mV/V ± 1%	**Recommended Excitation**	10V (15V Maximum)
Zero Balance	± 0.02 mV/V	**Insulation Resistance**	>2 [50V DC] GΩ
Non-linearity	< ± 0.017%	**Compensated Temperature Range**	-10°C to 50°C / 14°F to 122°F
Repeatability	< ± 0.017%	**Safe Overload**	150% of full scale
Hysteresis Error	< ± 0.017%	**Breaking Overload**	300% of full scale
Creep in 30 min.	< ± 0.023%	**Seal Type / IP Rating**	Cap.≤500lb:Environmentally Sealed / IP66
Input Resistance	350Ω ± 7		Cap.≥750lb:Environmentally Sealed / IP67
Output Resistance	350Ω ± 3	**Cable Color Code**	Exc+ Red Exc- Black
Element Material	Alloy Steel, Nickel Plated		Sig+ Green Sig- White Shield Bare

Rated Capacity	Deflection Emax (inch)	Width / Height	Part Number*	INTERCHANGEABLE REFERENCE: Artech	Coti-Global		Rice Lake		Vishay		
									Celtron	Revere	Sensortronics
				20210	CGSB	CGSB-1	RL20000	RL20001	STC	363	60001
50lb	0.004-0.008	W:0.65" (H:2.5")	101NH-50lb	W:0.75"	W:0.75"	W:0.75"	W:0.75"			(H:2.4")	
100lb	0.004-0.008	W:0.65" (H:2.5")	101NH-100lb	W:0.75"	W:0.75"	W:0.75"	W:0.75"			(H:2.4")	
200lb	0.005-0.009	W:0.65" (H:2.5")	101NH-200lb	W:0.75"	W:0.75"	W:0.75"	W:0.75"			(H:2.4")	
250lb 300lb	0.005-0.009	W:0.65" (H:2.5") (L:2") (T: 1/4-28 UNF-2B)	101NH-250lb 101NH-300lb	W:0.75"	W:0.75" (H:3") (T: 3/8-24 UNF-2B)	W:0.75"	W:0.75"	W: 0.75" (L: 3") (T: 3/8-24 UNF-2B)	W: 1.05" (H: 3") (T: 3/8-24 UNF-2B)	(H:2.4")	W: 0.75" (H: 3") (T: 3/8-24 UNF-2B)
500lb	0.005-0.009	W:0.89" (H:3")	101NH-500lb	W:1.00" (H:2.5")	W:1.00"	W:1.00" (H:2.5")	W:1.00" (H:2.5")	W:1.00"	W:1.2"	W:0.9" (H:2.4")	W:1.00"
750lb	0.004-0.008	W:1.11" (H:3")	101NH-750lb	W:1.00" (H:2.5")	W:1.00"	W:1.00" (H:2.5")	W:1.00" (H:2.5")	W:1.00"	W:1.2"	W:0.9" (H:2.4")	W:1.00"
1Klb	0.004-0.007	W:1.11" (H:3")	101NH-1Klb	W:1.00" (H:2.5")	W:1.00"	W:1.00" (H:2.5")	W:1.00" (H:2.5")	W:1.00"	W:1.03"	W:0.9" (H:2.4")	W:1.00"
1.5Klb	0.005-0.009	W:1.11" (H:3")	101NH-1.5Klb	W:1.00" (H:2.5")	W:1.00"	W:1.00" (H:2.5")	W:1.00" (H:2.5")	W:1.00"	W:1.03"	W:0.9" (H:2.4")	W:1.00"
2Klb	0.007-0.011	W:1.11" (H:3")	101NH-2Klb	W:1.00" (H:2.5")	W:1.00"	W:1.00" (H:2.5")	W:1.25" (H:2.5")	W:1.00"	W:1.25"	W:1.15" (H:2.4")	W:1.00"
2.5Klb	0.009-0.012	W:1.11" (H:3") (L:2")	101NH-2.5Klb	W:1.00" (H:2.5")	W:1.00"	W:1.00" (H:2.5")	W:1.25" (H:2.5") (L:3")	W:1.25"	W:1.25"	W:1.15" (H:2.4")	W:1.25"
3Klb	0.010-0.014	W:1.11" (H:3") (L:2") (T: 1/2-20 UNF-2B)	101NH-3Klb	W:1.0" (H:4.0") (L:3")	W:1.00"	W:1.0" (H:4.0") (L:3")	W:1.25" (H:4") (L:3")	W:1.25"	W:1.25"	W:1.15" (H:3.9") (T: 3/4-16 UNF-2B)	W:1.25"
5Klb	0.012-0.016	W:1" (H:4")	101NH-5Klb		(H:4.25")		W:1.25"	W:1.25" (H:4.25")	W:1.25" (H:4.25")	W:1.15" (H:3.90")	W:1.25" (H:4.25")
10Klb	0.014-0.018	W:1" (H:4") (L:3")	101NH-10Klb		(H:4.75")		W:1.25"	W:1.25" (H:4.75") (L:3.50")	W:1.25" (H:4.75") (L:3.50")	W:1.15" (H:3.90") (L:2.94")	W:1.25" (H:4.75") (L:3.50")
15Klb	0.014-0.018	W:1.25" (L:4") (T: 1-14 UNS-2B)	101NH-15Klb 101NH-15Klb-35ft	W:1.5" (L:3.5")			W:1.5" (T:1-12 UNF-2B)	W:1.50"	W:1.50"	W:1.65" (L:3.44")	W:1.50"
20Klb	0.015-0.019	W:2.0" (L:4.92")	101NH-20Klb 101NH-20Klb-35ft	(L:4.50?)	(L:5.00")		W:2.25" (L:5.00")	W:2.25" (L:5.00")	W:2.19" (L:5.00")	W:1.88" (L:4.44")	W:2.25" (L:5.00")

* ATEX, FM, IECEx approved versions carry the "-Ex" suffix.

100lb-500lb: up to NTEP 1:4 500 Class III, Single Cell; 1Klb-20Klb: up to NTEP 1:5 500 Class III, Single Cell
200kg-1.5t: up to OIML MAA C3, Y=17 000; 2t-10t: up to OIML MAA C4.5, Y=14 000
For further available P/N's & specifications per NTEP/OIML classes, please contact customer service.

© 2025 ANYLOAD V1 dimensions and specifications subject to change without notice

S-BEAMS

ANYLOAD

101NH-LE

Alloy Steel

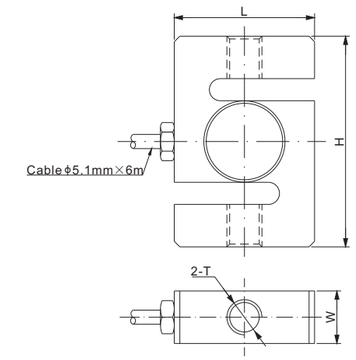

RoHS

DIMENSIONS

PART NUMBER	RATED CAPACITY	H	L	W	W1	T
	lb/inches					
101NH-LE5Klb	5,000	4.25	3.00	1.00	–	3/4-16 UNF
101NH-LE10Klb	10,000	4.75	3.50	1.00	–	3/4-16 UNF
101NH-05-LE5Klb	5,000	4.25	3.00	1.00	–	1/2-20 UNF
101NH-06-5Klb-1m	5,000	3.90	3.00	0.96	–	1/2-20 UNF

SPECIFICATIONS

Full Scale Output	3.0 mV/V ± 0.25%	**Recommended Excitation**	10V (15V Maximum)
Zero Balance	± 0.02 mV/V	**Insulation Resistance**	>2 [50V DC] GΩ
Non-linearity	< ± 0.03%	**Nominal Temperature Range**	-10°C to 50°C / 14°F to 122°F
Repeatability	< ± 0.01%	**Safe Overload**	150% of full scale
Hysteresis Error	< ± 0.02%	**Breaking Overload**	300% of full scale
Creep in 30 min.	< ± 0.02%	**Seal Type / IP Rating**	Environmentally Sealed / IP67
Input Resistance	385Ω ± 10	**Cable Color Code**	Exc+ Red Exc- Black
Output Resistance	350Ω ± 3		Sig+ Green Sig- White
Element Material	Alloy Steel, Nickel Plated		Shield Bare

PART NUMBER**

Rated Capacity	Part No.	Weight Approx. (kg)
5Klb	101NH-LE5Klb	1.5
10Klb	101NH-LE10Klb	1.5
5Klb*	101NH-05-LE5Klb	1.5
	101NH-06-5Klb-1m	1.2

**1/2-20 UNF thread, not inchangeable with Sensortronics 60001*
101NH-05-LE5Klb: favorable alternative to Rice Lake LTS load cell with 3mV/V.
101NH-06-5Klb-1m: Direct alternative for Rice Lake LTS load cell with 1.5mV/V.

**ATEX, FM, IECEx approved versions carry the "-Ex" suffix.

INTERCHANGEABLE PRODUCTS

Brand	Model*
Vishay Sensortronics	60001
Rice Lake	20001
Vishay Celtron	STC

**Interchangeable to 101NH-LE5Klb, 101NH-LE10Klb*

NTEP 1:5 000 Class IIIL, Multiple Cell
OIML MAA C4.5, Y=14 000
For further available P/N's & specifications per NTEP/OIML classes, please contact us.

S-BEAMS

© 2025 ANYLOAD V1 dimensions and specifications subject to change without notice

108AA

ANYLOAD

Aluminum

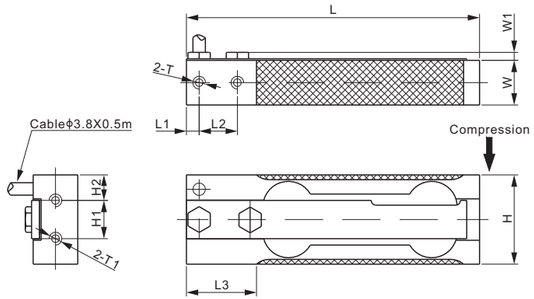

RoHS

DIMENSIONS

RATED CAPACITY	H	H1	H2	L	L1	L2	L3	W	W1	T	T1
kg/mm											
0.1-0.5	28	12	8	92	4	12	22	10	4	M4 Depth6	M4
1-2	28	12	8	92	4	12	22	12	4	M4 Depth8	M4
3-5	28	12	8	92	4	12	22	14	4	M4 Depth8	M4
lb/inches (conversion of above dimensions)											
0.22-1.1	1.10	0.47	0.31	3.62	0.16	0.47	0.87	0.39	0.16	M4 Depth0.24	M4
2.2-4.4	1.10	0.47	0.31	3.62	0.16	0.47	0.87	0.47	0.16	M4 Depth0.31	M4
6.6-11	1.10	0.47	0.31	3.62	0.16	0.47	0.87	0.55	0.16	M4 Depth0.31	M4

SPECIFICATIONS

Full Scale Output	Capacity≤500g: 1.0 mV/V ± 20% Capacity≥1kg: 2.0 mV/V ± 20%	**Recommended Excitation**	10V (15V Maximum)
Zero Balance	± 0.02 mV/V	**Reference Max.Platform Size**	Capacity≤500g: 200×200 mm Capacity≥1kg: 230×230 mm
Non-linearity	Cap.≤500g: < ± 0.023%; Cap.≥1kg: < ± 0.017%	**Insulation Resistance**	>2 [50V DC] GΩ
Repeatability	Cap.≤500g: < ± 0.023%; Cap.≥1kg: < ± 0.017%	**Nominal Temperature Range**	-10°C to 40°C / 14°F to 104°F
Hysteresis Error	Cap.≤500g: < ± 0.023%; Cap.≥1kg: < ± 0.017%	**Safe Overload**	150% of full scale
Creep in 30 min.	Cap.≤500g: < ± 0.050%; Cap.≥1kg: < ± 0.023%	**Breaking Overload**	300% of full scale
Input Resistance	415Ω ± 15	**Seal Type / IP Rating**	Environmentally Sealed / IP66
Output Resistance	350Ω ± 3	**Cable Color Code**	Exc+ Red Exc- Black Sig+ Green Sig- White Shield Bare
Element Material	Aluminum, Clear Anodized		

PART NUMBER*

Rated Capacity	Part No.	Weight Approx. (kg)
100g	108AA-100g	0.1
200g	108AA-200g	0.1
300g	108AA-300g	0.1
500g	108AA-500g	0.1
1kg	108AA-1kg	0.1
2kg	108AA-2kg	0.1
3kg	108AA-3kg	0.1
5kg	108AA-5kg	0.1

* ATEX, FM, IECEx approved versions carry the "-Ex" suffix.

1kg-5kg: OIML C3

For further available P/N's & specifications per OIML classes, please contact us.

SINGLE POINTS

www.anyload.com
© 2025 ANYLOAD V1 dimensions and specifications subject to change without notice

ANYLOAD

108AA3MUN

Aluminum, Precision High Moment Load Cell

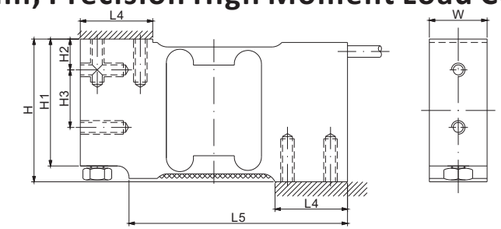

RoHS

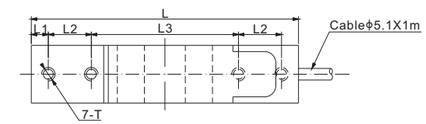

DIMENSIONS

RATED CAPACITY	H	H1	H2	H3	L	L1	L2	L3	L4	L5	W	T
kg/mm												
3-90	63.0	56.0	13.6	25.4	118.0	7.5	19.1	65.0	32.0	96.5	25.5	1/4-20UNC Depth19
lb/inches (conversion of above dimensions)												
6.61-198.42	2.48	2.20	0.54	1.00	4.65	0.30	0.75	2.56	1.26	3.80	1.00	1/4-20UNC Depth19

SPECIFICATIONS

Full Scale Output	2.0 mV/V ± 0.25%	**Recommended Torque**	3 to 30kg: 7Nm(62in-lb) 50 and 90kg: 10Nm(90in-lb)
Zero Balance	± 0.02 mV/V		
Non-linearity	< ± 0.03%	**Reference Max.Platform Size**	350×350 mm
Repeatability	< ± 0.03%	**Insulation Resistance**	>2 [50V DC] GΩ
Hysteresis Error	< ± 0.03%	**Nominal Temperature Range**	-10°C to 40°C / 14°F to 104°F
Creep in 30 min.	< ± 0.03%	**Safe Overload**	150% of full scale
Input Resistance	415Ω ± 15	**Breaking Overload**	300% of full scale
Output Resistance	350Ω ± 3	**Seal Type / IP Rating**	Environmentally Sealed / IP66
Element Material	Aluminum, Clear Anodized	**Cable Color Code**	Exc+ Green Exc- Black Sig+ Red Sig- White Shield Bare
Recommended Excitation	10V (15V Maximum)		

PART NUMBER*

Rated Capacity	Part No.	Weight Approx. (kg)
3kg	108AA3MUN-3kg	0.5
5kg	108AA3MUN-5kg	0.5
10kg	108AA3MUN-10kg	0.5
15kg	108AA3MUN-15kg	0.5
20kg	108AA3MUN-20kg	0.5
30kg	108AA3MUN-30kg	0.5
50kg	108AA3MUN-50kg	0.5
90kg	108AA3MUN-90kg	0.5

* ATEX, FM, IECEx approved versions carry the "-Ex" suffix.

INTERCHANGEABLE REFERENCE

Brand	Model
Vishay Tedea-Huntleigh	1010
Vishay Tedea-Huntleigh	1015

SINGLE POINTS

www.anyload.com
© 2025 ANYLOAD V1 dimensions and specifications subject to change without notice

108BA

ANYLOAD

Aluminum

Capacity: 3-75kg

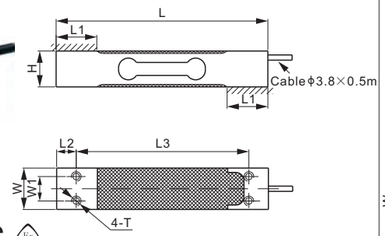

Capacity: 100kg; 150kg

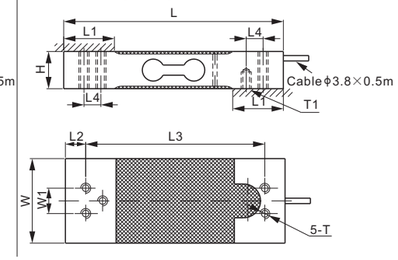

DIMENSIONS

RATED CAPACITY	H	L	L1	L2	L3	L4	W	W1	T	T1
kg/mm										
3–30	22.0	130.0	25.0	12.0	106.0	–	25.4	15.0	M6	–
35	22.0	130.0	25.0	12.0	106.0	–	30.0	15.0	M6	–
40	22.0	130.0	25.0	12.0	106.0	–	38.5	15.0	M6	–
50; 60; 75	22.0	130.0	30.0	12.0	106.0	–	38.5	15.0	M6	–
100; 150	22.0	130.0	30.0	12.0	106.0	10.0	50.0	15.0	M6	M6 Depth10
lb/inches (conversion of above dimensions)										
6.61–66.14	0.87	5.12	0.98	0.47	4.17	–	1.00	0.59	M6	–
77.16	0.87	5.12	0.98	0.47	4.17	–	1.18	0.59	M6	–
88.18	0.87	5.12	0.98	0.47	4.17	–	1.52	0.59	M6	–
110.23; 132.28; 165.35	0.87	5.12	1.18	0.47	4.17	–	1.52	0.59	M6	–
220.46; 330.69	0.87	5.12	1.18	0.47	4.17	0.39	1.97	0.59	M6	M6 Depth0.39

SPECIFICATIONS

Full Scale Output	2.0 mV/V ± 10%	**Recommended Excitation**	10V (15V Maximum)
Zero Balance	± 0.02 mV/V	**Reference Max.Platform Size**	400×400 mm
Non-linearity	< ± 0.017%	**Insulation Resistance**	>2 [50V DC] GΩ
Repeatability	< ± 0.017%	**Nominal Temperature Range**	-10°C to 40°C / 14°F to 104°F
Hysteresis Error	< ± 0.017%	**Safe Overload**	150% of full scale
Creep in 30 min.	< ± 0.023%	**Breaking Overload**	300% of full scale
Input Resistance	415Ω ± 15	**Seal Type / IP Rating**	Environmentally Sealed / IP66
Output Resistance	350Ω ± 3	**Cable Color Code**	Exc+ Red Exc- Black Sig+ Green Sig- White Shield Bare
Element Material	Aluminum, Clear Anodized		

PART NUMBER*

Rated Capacity	Part No.	Weight Approx. (kg)
3kg	108BA-3kg	0.2
6kg	108BA-6kg	0.2
6kg**	108BA-03-6kg	0.2
7kg	108BA-7kg	0.2
10kg	108BA-10kg	0.2
15kg	108BA-15kg	0.2
20kg	108BA-20kg	0.2
30kg	108BA-30kg	0.2
35kg	108BA-35kg	0.2
40kg (W=38.5mm)	108BA-40kg	0.2
40kg (W=30mm)	108BA-W1-40kg	0.2
50kg	108BA-50kg	0.26
60kg	108BA-60kg	0.26
75kg	108BA-75kg	0.26
100kg	108BA-100kg	0.35
150kg	108BA-150kg	0.35

* ATEX, FM, IECEx approved versions carry the "-Ex" suffix.
*** W=30.0mm, side cable exit*

INTERCHANGEABLE REFERENCE

Brand	Model
Mettler-Toledo	MT1022
Flintec	PC22*
HBM	PW6C**
HBM	PW6K
Rice Lake	RL1521A
Vishay Celtron	LPS ME 6-35kg
Vishay Tedea-Huntleigh	1022

** PC22 : 6-wire cable, the shielding wire connected to the sensor body, width of 20kg and 30kg is 30mm.*
*** Full scale output of PW6C: 2.2 ± 0.2% mV/V*

NTEP 1:5 000 Class III, Single Cell

6kg-40kg: OIML MAA C7.5, Y=20 000;
50kg-150kg: OIML MAA C6, Y=29 000
For further available P/N's & specifications per NTEP/OIML classes, please contact us.

AVAILABLE OPTIONS

- 1m cable
- 3m cable
- Stainless steel version 108BS

SINGLE POINTS

© 2025 ANYLOAD V1 dimensions and specifications subject to change without notice

ANYLOAD

108BATD

Aluminum

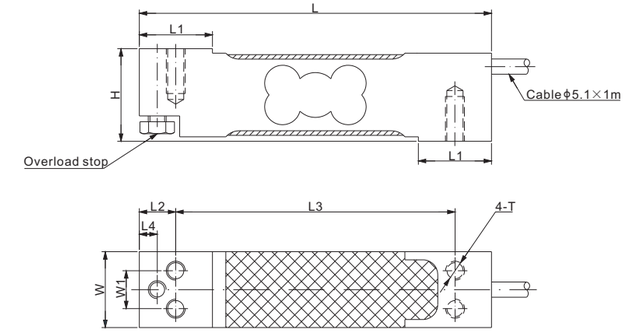

DIMENSIONS

RATED CAPACITY	H	L	L1	L2	L3	L4	W	W1	T
kg/mm									
3–100	31.0	118.0	24.5	12.2	93.6	6.0	25.4	12.7	1/4–20 UNC Depth 15
lb/inches (conversion of above dimensions)									
6.61–220.46	1.22	4.65	0.96	0.48	3.69	0.24	1.00	0.50	1/4–20 UNC Depth 0.59

SPECIFICATIONS

Full Scale Output	2.0 mV/V ± 10%	**Recommended Excitation**	10V (15V Maximum)
Zero Balance	± 0.02 mV/V	**Reference Max.Platform Size**	350×350 mm
Non-linearity	< ± 0.017%	**Insulation Resistance**	>2 [50V DC] GΩ
Repeatability	< ± 0.017%	**Nominal Temperature Range**	-10°C to 40°C / 14°F to 104°F
Hysteresis Error	< ± 0.017%	**Safe Overload**	150% of full scale
Creep in 30 min.	< ± 0.023%	**Breaking Overload**	300% of full scale
Input Resistance	415Ω ± 15	**Seal Type / IP Rating**	Environmentally Sealed / IP66
Output Resistance	350Ω ± 3	**Cable Color Code**	Exc+ Red Exc- Black Sig+ Green Sig- White Shield Bare
Element Material	Aluminum, Clear Anodized		

PART NUMBER*

Rated Capacity	Part No.	Weight Approx. (kg)
3kg	108BATD-3kg	0.3
5kg	108BATD-5kg	0.3
7kg	108BATD-7kg	0.3
10kg	108BATD-10kg	0.3
15kg	108BATD-15kg	0.3
20kg	108BATD-20kg	0.3
30kg	108BATD-30kg	0.3
50kg	108BATD-50kg	0.3
100kg	108BATD-100kg	0.3

* ATEX, FM, IECEx approved versions carry the "-Ex" suffix.

NTEP 1:5 000 Class III, Single Cell

5kg-30kg: OIML MAA C7.5, Y=20 000;
50kg-100kg: OIML MAA C6, Y=29 000
For further available P/N's & specifications per NTEP/OIML classes, please contact us.

INTERCHANGEABLE REFERENCE

Brand	Model
Vishay Tedea-Huntleigh	1030

SINGLE POINTS

© 2025 ANYLOAD V1 dimensions and specifications subject to change without notice

108CA

ANYLOAD

Aluminum

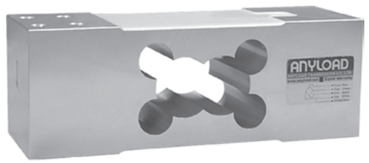

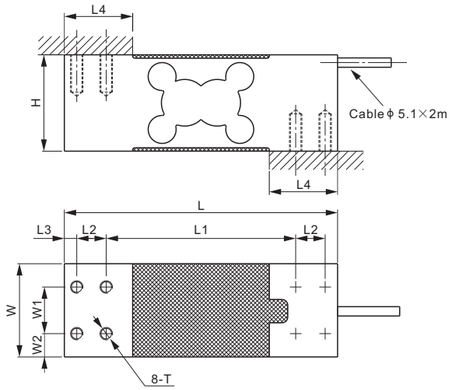

RoHS

DIMENSIONS

RATED CAPACITY	H	L	L1	L2	L3	L4	W	W1	W2	T
kg/mm										
10–1,000	62.0	176.0	122.0	19.0	8.0	44.0	60.0	30.0	15.0	M8 Depth20
lb/inches (conversion of above dimensions)										
22–2,204.6	2.44	6.93	4.80	0.75	0.31	1.73	2.36	1.18	0.59	M8 Depth0.79

SPECIFICATIONS

Full Scale Output	2.0 mV/V ± 10%	**Recommended Excitation**	10V (15V Maximum)
Zero Balance	± 0.02 mV/V	**Reference Max.Platform Size**	600×700 mm
Non-linearity	< ± 0.017%	**Insulation Resistance**	>2 [50V DC] GΩ
Repeatability	< ± 0.017%	**Nominal Temperature Range**	-10°C to 40°C / 14°F to 104°F
Hysteresis Error	< ± 0.017%	**Safe Overload**	150% of full scale
Creep in 30 min.	< ± 0.023%	**Breaking Overload**	300% of full scale
Input Resistance	415Ω ± 15	**Seal Type / IP Rating**	Environmentally Sealed / IP66
Output Resistance	350Ω ± 3	**Cable Color Code**	Exc+ Red Exc- Black
Element Material	Aluminum, Clear Anodized		Sig+ Green Sig- White Shield Bare

PART NUMBER*

Rated Capacity	Part No.	Weight Approx. (kg)
10kg	108CA-10kg	1.5
20kg	108CA-20kg	1.5
30kg	108CA-30kg	1.5
60kg	108CA-60kg	1.5
100kg	108CA-100kg	1.5
150kg	108CA-150kg	1.5
200kg	108CA-200kg	1.5
250kg	108CA-250kg	1.5
300kg	108CA-300kg	1.5
500kg	108CA-500kg	1.6
600kg	108CA-600kg	1.6
750kg	108CA-750kg	1.6
1t	108CA-1t	1.6

* ATEX, FM, IECEx approved versions carry the "-Ex" suffix.

INTERCHANGEABLE REFERENCE

Brand	Model
Coti Global	CG-50-2
HBM	PW24A
Vishay Tedea-Huntleigh	1263

10kg-500kg: NTEP 1:5 000 Class III, Single Cell
600kg-1t: NTEP 1:4 000 Class III, Single Cell

10kg-30kg: OIML MAA C7.5, Y=20 000;
60kg-500kg: OIML MAA C6, Y=29 000;
600kg-1t: OIML MAA C4, Y=4 000

For further available P/N's & specifications per NTEP/OIML classes, please contact us.

AVAILABLE OPTIONS

■ Stainless steel version: 651KSCS (page 65)

SINGLE POINTS

www.anyload.com
© 2025 ANYLOAD V1 dimensions and specifications subject to change without notice

ANYLOAD

651KSCS

Stainless Steel

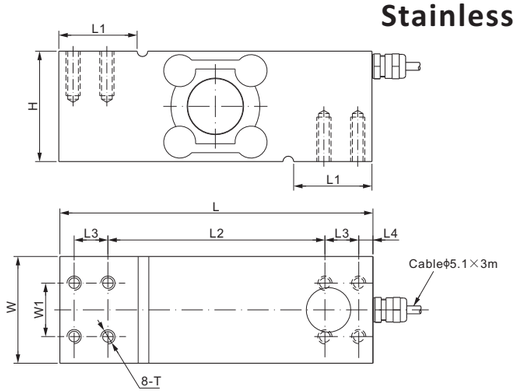

RoHS

DIMENSIONS

RATED CAPACITY	H	L	L1	L2	L3	L4	W	W1	T
kg/mm									
60–1,000	62.0	176.0	44.0	122.0	19.0	8.0	60.0	30.0	M8 Depth25
lb/inches (conversion of above dimensions)									
132.3–2,204.6	2.44	6.93	1.73	4.80	0.75	0.31	2.36	1.18	M8 Depth0.98

SPECIFICATIONS

Full Scale Output	2.0 mV/V ± 0.25%	**Recommended Excitation**	10V (15V Maximum)
Zero Balance	± 0.02 mV/V	**Reference Max.Platform Size**	600×700 mm
Non-linearity	< ± 0.03%	**Insulation Resistance**	>2 [50V DC] GΩ
Repeatability	< ± 0.02%	**Nominal Temperature Range**	-10°C to 50°C / 14°F to 122°F
Hysteresis Error	< ± 0.02%	**Safe Overload**	150% of full scale
Creep in 30 min.	< ± 0.03%	**Breaking Overload**	300% of full scale
Input Resistance	385Ω ± 15	**Seal Type / IP Rating**	Welded Seal / IP68
Output Resistance	350Ω ± 3	**Cable Color Code**	Exc+ Red Exc- Black
Element Material	17-4PH Stainless Steel		Sig+ Green Sig- White Shield Bare

PART NUMBER*

Rated Capacity	Part No.	Weight Approx. (kg)
60kg	651KSCS-60kg	4.0
100kg	651KSCS-100kg	4.0
150kg	651KSCS-150kg	4.0
200kg	651KSCS-200kg	4.0
250kg	651KSCS-250kg	4.0
300kg	651KSCS-300kg	4.0
500kg	651KSCS-500kg	4.0
600kg	651KSCS-600kg	4.0
750kg	651KSCS-750kg	4.0
1t	651KSCS-1t	4.0

* ATEX, FM, IECEx approved versions carry the "-Ex" suffix.

60kg: NTEP 1:10 000 Class III, Single Cell;
100kg - 500kg: NTEP 1:5 000 Class III, Single Cell;

60kg: OIML MAA C9, Y=18 000;
100kg - 500kg: OIML MAA C4, Y=26 000

For further available P/N's & specifications per NTEP/OIML classes, please contact us.

AVAILABLE OPTIONS

■ Aluminum version: 108CA (page 64)

SINGLE POINTS

www.anyload.com
© 2025 ANYLOAD V1 dimensions and specifications subject to change without notice

108DA

ANYLOAD

Aluminum

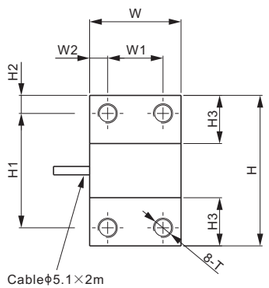

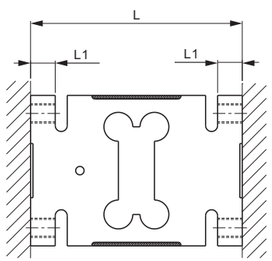

RoHS

DIMENSIONS

RATED CAPACITY	H	H1	H2	H3	L	L1	W	W1	W2	T
kg/mm										
500–2,000	125.0	95.0	15.0	40.0	176.0	20.5	76.0	46.0	15.0	M16
lb/inches (conversion of above dimensions)										
1,102.3–4,409.2	4.92	3.74	0.59	1.57	6.93	0.81	2.99	1.81	0.59	M16

SPECIFICATIONS

Full Scale Output	2.0 mV/V ± 10%	**Recommended Excitation**	10V (15V Maximum)
Zero Balance	± 0.02 mV/V	**Reference Max.Platform Size**	1200×1200 mm
Non-linearity	< ± 0.017%	**Insulation Resistance**	>2 [50V DC] GΩ
Repeatability	< ± 0.017%	**Nominal Temperature Range**	-10°C to 40°C / 14°F to 104°F
Hysteresis Error	< ± 0.017%	**Safe Overload**	150% of full scale
Creep in 30 min.	< ± 0.023%	**Breaking Overload**	300% of full scale
Input Resistance	415Ω ± 15	**Seal Type / IP Rating**	Environmentally Sealed / IP66
Output Resistance	350Ω ± 3	**Cable Color Code**	Exc+ Red Exc- Black
Element Material	Aluminum, Clear Anodized		Sig+ Green Sig- White Shield Bare

PART NUMBER*

Rated Capacity	Part No.	Weight Approx. (kg)
500kg	108DA-500kg	3.6
800kg	108DA-800kg	3.6
1t	108DA-1t	3.6
1.5t	108DA-1.5t	3.6
2t	108DA-2t	3.6

* ATEX, FM, IECEx approved versions carry the "-Ex" suffix.

NTEP 1:6 000 Class III, Single Cell

OIML MAA C6, Y=15 000

For further available P/N's & specifications per NTEP/OIML classes, please contact us.

INTERCHANGEABLE REFERENCE

Brand	Model
Vishay Celtron	HOC
Vishay Tedea-Huntleigh	1320*
Flintec	PC81*

** Cable length and cable color code may not be the same*

SINGLE POINTS

www.anyload.com
© 2025 ANYLOAD V1 dimensions and specifications subject to change without notice

ANYLOAD

108EA

Aluminum

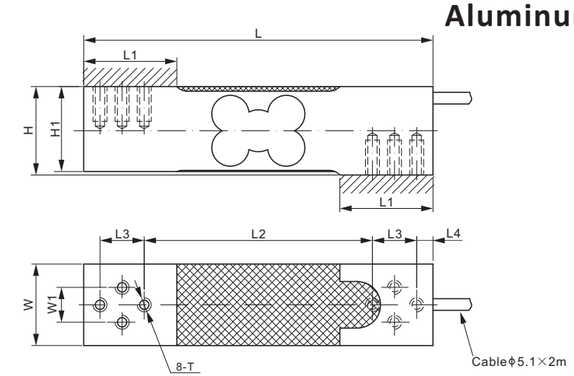

RoHS

DIMENSIONS

RATED CAPACITY	H	H1	L	L1	L2	L3	L4	W	W1	T
kg/mm										
30–300	38.0	36.5	150.0	40.0	98.0	19.0	7.0	35.0	15.0	M6 Depth15
lb/inches (conversion of above dimensions)										
66.14–661.39	1.50	1.44	5.91	1.57	3.86	0.75	0.28	1.38	0.59	M6 Depth0.59

SPECIFICATIONS

Full Scale Output	2.0 mV/V ± 10%	**Recommended Excitation**	10V (15V Maximum)
Zero Balance	± 0.02 mV/V	**Reference Max.Platform Size**	450×450 mm
Non-linearity	< ± 0.017%	**Insulation Resistance**	>2 [50V DC] GΩ
Repeatability	< ± 0.017%	**Nominal Temperature Range**	-10°C to 40°C / 14°F to 104°F
Hysteresis Error	< ± 0.017%	**Safe Overload**	150% of full scale
Creep in 30 min.	< ± 0.023%	**Breaking Overload**	300% of full scale
Input Resistance	415Ω ± 15	**Seal Type / IP Rating**	Environmentally Sealed / IP66
Output Resistance	350Ω ± 3	**Cable Color Code**	Exc+ Red Exc- Black
Element Material	Aluminum, Clear Anodized		Sig+ Green Sig- White Shield Bare

PART NUMBER*

Rated Capacity	Part No.	Weight Approx. (kg)
30kg	108EA-30kg	0.5
60kg	108EA-60kg	0.5
100kg	108EA-100kg	0.5
150kg	108EA-150kg	0.5
200kg	108EA-200kg	0.5
300kg	108EA-300kg	0.5

* ATEX, FM, IECEx approved versions carry the "-Ex" suffix.

NTEP 1:5 000 Class III, Single Cell

30kg: OIML MAA C7.5, Y=20 000;
60kg-300kg: OIML MAA C6, Y=29 000

For further available P/N's & specifications per NTEP/OIML classes, please contact us.

SINGLE POINTS

www.anyload.com
© 2025 ANYLOAD V1 dimensions and specifications subject to change without notice

108HAUN

ANYLOAD

Aluminum

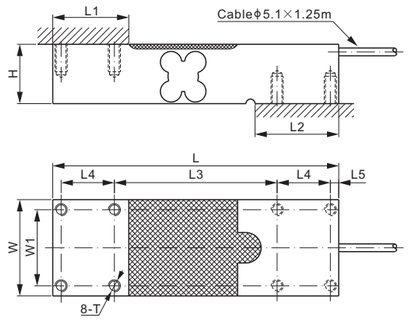

RoHS

DIMENSIONS

RATED CAPACITY	H	L	L1	L2	L3	L4	L5	W	W1	T
kg/mm										
50–1,000	38.0	188	50.0	55.0	107	35.0	5.50	63.3	50.0	5/16–18 UNC Depth18
lb/inches (conversion of above dimensions)										
110.23–2,204.6	1.50	7.4	1.97	2.17	4.21	1.38	0.22	2.49	1.97	5/16–18 UNC Depth0.71

SPECIFICATIONS

Full Scale Output	2.0 mV/V ± 0.25%	**Recommended Excitation**	10V (15V Maximum)
Zero Balance	± 0.02 mV/V	**Reference Max.Platform Size**	550×600 mm
Non-linearity	< ± 0.017%	**Insulation Resistance**	>2［50V DC］GΩ
Repeatability	< ± 0.017%	**Nominal Temperature Range**	-10°C to 40°C / 14°F to 104°F
Hysteresis Error	< ± 0.017%	**Safe Overload**	150% of full scale
Creep in 30 min.	< ± 0.023%	**Breaking Overload**	300% of full scale
Input Resistance	415Ω ± 15	**Seal Type / IP Rating**	Environmentally Sealed / IP66
Output Resistance	350Ω ± 3	**Cable Color Code**	Exc+ Red Exc- Black
Element Material	Aluminum, Clear Anodized		Sig+ Green Sig- White Shield Bare

PART NUMBER*

Rated Capacity	Part No.	Weight Approx. (kg)
50kg	108HAUN-50kg	1.3
100kg	108HAUN-100kg	1.3
250kg	108HAUN-250kg	1.3
635kg	108HAUN-635kg	1.3
1t	108HAUN-1t	1.3

* ATEX, FM, IECEx approved versions carry the "-Ex" suffix.

50kg-250kg: NTEP 1:5 000 Class III, Single Cell;
635kg-1t: NTEP 1:4 000 Class III, Single Cell

50kg-250kg: OIML MAA C6, Y=29 000;
635kg-1t: OIML MAA C4, Y=4 000
For further available P/N's & specifications per NTEP/OIML classes, please contact us.

SINGLE POINTS

© 2025 ANYLOAD V1 dimensions and specifications subject to change without notice

ANYLOAD

108JA; 108JA-21

Aluminum

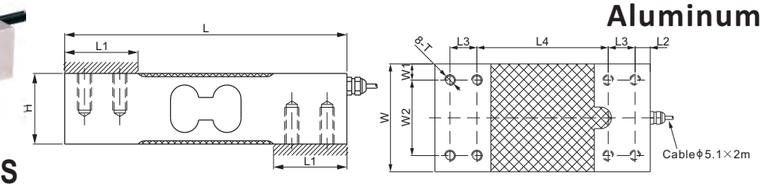

RoHS

DIMENSIONS

RATED CAPACITY	H	L	L1	L2	L3	L4	W	W1	W2	T
108JA: kg/mm										
20–100	25.0	150.0	32.5	6.0	19.0	100.0	45.0	7.5	30.0	M8 Depth15
LE60–LE100; SE150–SE400	40.0	150.0	32.5	6.0	19.0	100.0	45.0	7.5	30.0	M8 Depth20
150–400; SE600	40.0	150.0	38.5	6.0	25.0	88.0	75.0	12.5	50.0	M8 Depth20
500–2,000	50.0	200.0	52.0	14.0	25.0	122.0	100.0	15.0	70.0	M10 Depth23
lb/inches (conversion of above dimensions)										
44.1–220.5	0.98	5.91	1.28	0.24	0.75	3.94	1.77	0.30	1.18	M8 Depth0.59
LE132.3–LE220.5; SE330.7–SE881.8	1.57	5.91	1.28	0.24	0.75	3.94	1.77	0.30	1.18	M8 Depth0.79
330.7–881.8; SE1,322.8	1.57	5.91	1.52	0.24	0.98	3.46	2.95	0.49	1.97	M8 Depth0.79
1,102.3–4,409.2	1.97	7.87	2.05	0.55	0.98	4.80	3.94	0.59	2.76	M10 Depth0.91
108JA-21: kg/mm										
30–150	38.0	150.0	44.0	6.3	25.4	86.6	38.0	–	25.4	M6 Depth 15
lb/inches (conversion of above dimensions)										
66.14–330.70	1.50	5.91	1.73	0.25	1.00	3.41	1.50	–	1.00	M6 Depth 0.59

SPECIFICATIONS

Full Scale Output	2.0 mV/V ± 10%	**Reference Max.Platform Size**	108JA: Capacity: 20-100kg: 460×600 mm Capacity: 150-400kg: 600×600 mm Capacity: 500kg-2t: 900×900 mm 108JA-21: 500×500 mm
Zero Balance	± 0.02 mV/V		
Non-linearity	< ± 0.017%		
Repeatability	< ± 0.017%		
Hysteresis Error	< ± 0.017%	**Nominal Temperature Range**	-10°C to 40°C / 14°F to 104°F
Creep in 30 min.	< ± 0.017%;	**Seal Type / IP Rating**	Environmentally Sealed / IP66
Input Resistance	415Ω ± 15	**Cable Color Code**	108JA: Exc+ Red Exc- Black Sig+ Green Sig- White Shield Bare 108JA-21: Exc+ Green Exc- Black Sig+ Red Sig- White Shield Bare
Output Resistance	350Ω ± 3		
Element Material	Aluminum, Clear Anodized		
Recommended Excitation	10V (15V Maximum)		
Safe Overload	150% of full scale		
Breaking Overload	300% of full scale		
Insulation Resistance	>2［50V DC］GΩ		

PART NUMBER*

Rated Capacity	Part No.	Weight Approx. (kg)
20kg	108JA-20kg	0.4
50kg	108JA-50kg	0.5
60kg	108JA-60kg	0.5
LE60kg	108JA-LE60kg	0.7
75kg	108JA-75kg	0.5
LE75kg	108JA-LE75kg	0.7
100kg	108JA-100kg	0.5
LE100kg	108JA-LE100kg	0.7
SE150kg	108JA-SE150kg	0.7
150kg	108JA-150kg	1.1
SE200kg	108JA-SE200kg	0.7
200kg	108JA-200kg	1.1
SE300kg	108JA-SE300kg	0.7
300kg	108JA-300kg	1.1
SE400kg	108JA-SE400kg	0.7
400kg	108JA-400kg	1.1
500kg	108JA-500kg	2.5
SE600kg	108JA-SE600kg	1.1
750kg	108JA-750kg	2.5
1t	108JA-1t	2.5
1.5t	108JA-1.5t	2.5
2t	108JA-2t	2.6

* ATEX, FM, IECEx approved versions carry the "-Ex" suffix.

PART NUMBER

Rated Capacity	Part No.	Weight (kg) Approx.
30kg	108JA-30kg-21	0.6
50kg	108JA-50kg-21	0.6
75kg	108JA-75kg-21	0.6
100kg	108JA-100kg-21	0.6
150kg	108JA-150kg-21	0.6

INTERCHANGEABLE REFERENCE

Brand	Model
108JA-21	
Vishay-Tedea Huntliegh	1242
Mettler Toledo	MT1241

20kg-500kg: NTEP 1:5 000 Class III, Single Cell;
SE600kg-2t: NTEP 1:4 000 Class III, Single Cell
20kg-30kg: OIML MAA C7.5, Y=20 000;
50kg-500kg: OIML MAA C6, Y=29 000;
SE600kg-2t: OIML MAA C4, Y=4 000
For further available P/N's & specifications per NTEP/OIML classes, please contact us.

SINGLE POINTS

© 2025 ANYLOAD V1 dimensions and specifications subject to change without notice

108LAMT

ANYLOAD

Aluminum

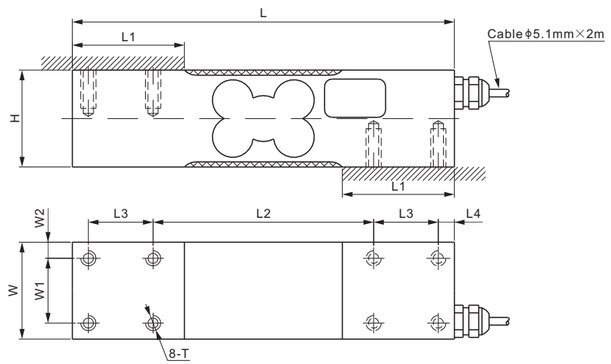

CE ATEX FM APPROVED IECEx RoHS

DIMENSIONS

RATED CAPACITY	H	L	L1	L2	L3	L4	W	W1	W2	T
kg/mm										
30-300	38.0	150.0	44.0	86.6	25.4	6.3	38.0	25.4	6.3	M6 Depth 15
lb/inches (conversion of above dimensions)										
66-661	1.50	5.91	1.73	3.41	1.00	0.25	1.50	1.00	0.25	M6 Depth 0.59

SPECIFICATIONS

Full Scale Output	2.0 mV/V ± 10%	**Recommended Excitation**	10V (15V Maximum)
Zero Balance	± 0.02 mV/V	**Reference Max.Platform Size**	500×500 mm
Non-linearity	< ± 0.017%	**Insulation Resistance**	>2 [50V DC] GΩ
Repeatability	< ± 0.017%	**Compensated Temperature Range**	-10°C to 40°C / 14°F to 104°F
Hysteresis Error	< ± 0.017%	**Safe Overload**	150% of full scale
Creep in 30 min.	< ± 0.023%	**Breaking Overload**	300% of full scale
Input Resistance	385Ω ± 15	**Seal Type / IP Rating**	Environmentally Sealed / IP66
Output Resistance	350Ω ± 3	**Cable Color Code**	Exc+ Red Exc- Black
Element Material	Aluminum, Clear Anodized		Sig+ Green Sig- White Shield Bare

PART NUMBER*

Rated Capacity	Part No.	Shipping Weight Approx. (kg)
30kg	108LAMT-30kg	0.6
50kg	108LAMT-50kg	0.6
60kg	108LAMT-60kg	0.6
100kg	108LAMT-100kg	0.6
150kg	108LAMT-150kg	0.6
200kg	108LAMT-200kg	0.6
300kg	108LAMT-300kg	0.6

* ATEX, FM, IECEx approved versions carry the "-Ex" suffix.

INTERCHANGEABLE PRODUCTS

Brand	Model
Mettler-Toledo	MT1241

AVAILABLE OPTIONS

■ Stainless Steel 2Cr13 version: 108LSMT (page 71)

SINGLE POINTS

www.anyload.com
© 2025 ANYLOAD V1 dimensions and specifications subject to change without notice

ANYLOAD

108LSMT

Stainless Steel

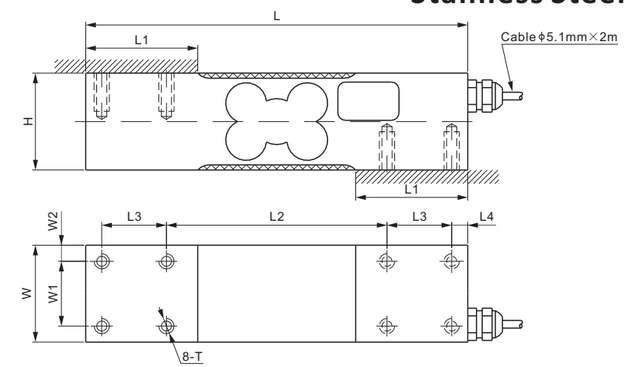

CE ATEX FM APPROVED IECEx RoHS

DIMENSIONS

RATED CAPACITY	H	L	L1	L2	L3	L4	W	W1	W2	T
kg/mm										
30-300	38.0	150.0	44.0	86.6	25.4	6.3	38.0	25.4	6.3	M6 Depth 15
lb/inches (conversion of above dimensions)										
66-661	1.50	5.91	1.73	3.41	1.00	0.25	1.50	1.00	0.25	M6 Depth 0.59

SPECIFICATIONS

Full Scale Output	2.0 mV/V ± 10%	**Recommended Excitation**	10V (15V Maximum)
Zero Balance	± 0.02 mV/V	**Reference Max.Platform Size**	500×500 mm
Non-linearity	< ± 0.017%	**Insulation Resistance**	>2 [50V DC] GΩ
Repeatability	< ± 0.017%	**Compensated Temperature Range**	-10°C to 50°C / 14°F to 122°F
Hysteresis Error	< ± 0.017%	**Safe Overload**	150% of full scale
Creep in 30 min.	< ± 0.023%	**Breaking Overload**	300% of full scale
Input Resistance	385Ω ± 15	**Seal Type / IP Rating**	Environmentally Sealed / IP66
Output Resistance	350Ω ± 3	**Cable Color Code**	Exc+ Red Exc- Black
Element Material	2Cr13 Stainless Steel		Sig+ Green Sig- White Shield Bare

PART NUMBER*

Rated Capacity	Part No.	Weight Approx. (kg)
30kg	108LSMT-30kg-YZ	1.4
50kg	108LSMT-50kg-YZ	1.4
100kg	108LSMT-100kg-YZ	1.4
200kg	108LSMT-200kg-YZ	1.5
300kg	108LSMT-300kg-YZ	1.5

* ATEX, FM, IECEx approved versions carry the "-Ex" suffix.

INTERCHANGEABLE REFERENCE

Brand	Model
Mettler-Toledo	SSP1241

AVAILABLE OPTIONS

■ Aluminum version: 108LAMT (page 70)

SINGLE POINTS

www.anyload.com
© 2025 ANYLOAD V1 dimensions and specifications subject to change without notice

108KS; 108KSUN

ANYLOAD

Stainless Steel

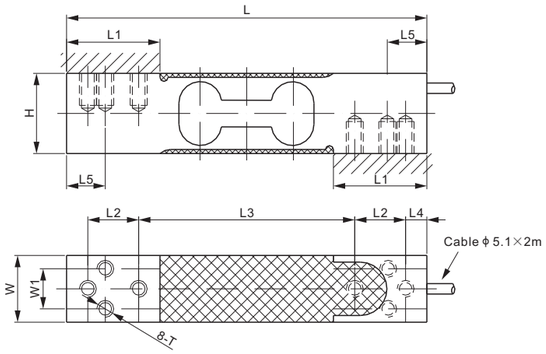

CE Ex ATEX FM APPROVED IECEx RoHS

DIMENSIONS

RATED CAPACITY	H	L	L1	L2	L3	L4	L5	W	W1	T
108KS:										
kg/mm										
4-150	30.0	135.0	35.0	19.1	81.0	8.0	14.5	25.0	15.0	M6 Depth12
lb/inches (conversion of above dimensions)										
8.8-330.7	1.18	5.31	1.38	0.75	3.19	0.31	0.57	0.98	0.59	M6 Depth0.47
108KSUN:										
kg/mm										
4-150	30.0	135.0	35.0	19.1	81.0	8.0	14.5	25.0	15.0	1/4-20UNC-2B Depth12
lb/inches (conversion of above dimensions)										
8.8-330.7	1.18	5.31	1.38	0.75	3.19	0.31	0.57	0.98	0.59	1/4-20UNC-2B Depth0.47

SPECIFICATIONS

Full Scale Output	2.0 mV/V ± 10%	**Recommended Excitation**	10V (15V Maximum)
Zero Balance	± 0.02 mV/V	**Reference Max.Platform Size**	400×400 mm
Non-linearity	< ± 0.017%	**Insulation Resistance**	>2 [50V DC] GΩ
Repeatability	< ± 0.017%	**Compensated Temperature Range**	-10°C to 50°C / 14°F to 122°F
Hysteresis Error	< ± 0.017%	**Safe Overload**	150% of full scale
Creep in 30 min.	< ± 0.023%	**Breaking Overload**	300% of full scale
Input Resistance	385Ω ± 15	**Seal Type / IP Rating**	Environmentally Sealed / IP66
Output Resistance	350Ω ± 3	**Cable Color Code**	Exc+ Red Exc- Black Sig+ Green Sig- White Shield Bare
Element Material	2Cr13 Stainless Steel		

PART NUMBER*

Rated Capacity	Part No.	Weight Approx. (kg)
4kg	108KS-4kg-YZ	0.65
	108KSUN-4kg-YZ	0.65
7kg	108KS-7kg-YZ	0.65
	108KSUN-7kg-YZ	0.65
10kg	108KS-10kg-YZ	0.65
	108KSUN-10kg-YZ	0.65
15kg	108KS-15kg-YZ	0.65
	108KSUN-15kg-YZ	0.65
20kg	108KS-20kg-YZ	0.65
	108KSUN-20kg-YZ	0.65
30kg	108KS-30kg-YZ	0.65
	108KSUN-30kg-YZ	0.65
50kg	108KS-50kg-YZ	0.65
	108KSUN-50kg-YZ	0.65
75kg	108KS-75kg-YZ	0.65
	108KSUN-75kg-YZ	0.65
100kg	108KS-100kg-YZ	0.65
	108KSUN-100kg-YZ	0.65
150kg	108KS-150kg-YZ	0.65
	108KSUN-150kg-YZ	0.65

* ATEX, FM, IECEx approved versions carry the "-Ex" suffix.

INTERCHANGEABLE REFERENCE

Brand	Model
108KS	
Flintec	PC30
Vishay Tedea-Huntleigh	1130 (mounting hole: M6)
108KSUN	
Avery Weigh-Tronix	MK29
Coti Global	CG-1130
Vishay Tedea-Huntleigh	1130 (mounting hole: 1/4"-20UNC)

SINGLE POINTS

www.anyload.com
© 2025 ANYLOAD V1 dimensions and specifications subject to change without notice

ANYLOAD

651KS55UN

Stainless Steel

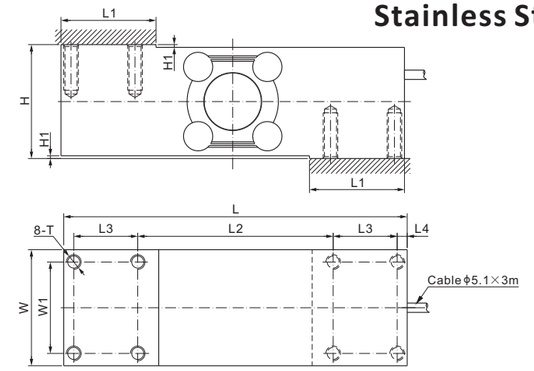

NTEP OIML CE Ex ATEX FM APPROVED IECEx RoHS

DIMENSIONS

RATED CAPACITY	H	H1	L	L1	L2	L3	L4	W	W1	T
kg/mm										
50-500	62.3	1.5	188.0	52.0	107.0	35.0	5.5	63.5	50.0	5/16-18 UNC-2B Depth 20
lb/inches (conversion of above dimensions)										
110.23-1,102.31	2.45	0.06	7.40	2.04	4.21	1.38	0.22	2.50	1.97	5/16-18 UNC-2B Depth 0.79

SPECIFICATIONS

Full Scale Output	2.0 mV/V ± 0.25%	**Recommended Excitation**	10V (15V Maximum)
Zero Balance	± 0.02 mV/V	**Reference Max.Platform Size**	610×700 mm
Non-linearity	< ± 0.03%	**Insulation Resistance**	>2 [50V DC] GΩ
Repeatability	< ± 0.02%	**Compensated Temperature Range**	-10°C to 50°C / 14°F to 122°F
Hysteresis Error	< ± 0.03%	**Safe Overload**	150% of full scale
Creep in 30 min.	< ± 0.02%	**Breaking Overload**	300% of full scale
Input Resistance	1100Ω ± 50	**Seal Type / IP Rating**	Welded Seal / IP68
Output Resistance	960Ω ± 50	**Cable Color Code**	Exc+ Red Exc- Black Sig+ Green Sig- White Shield Bare
Element Material	17-4PH Stainless Steel		

PART NUMBER*

Rated Capacity	Part No.	Weight Approx. (kg)
50kg	651KS55UN-50kg	4.7
75kg	651KS55UN-75kg	4.7
100kg	651KS55UN-100kg	4.7
150kg	651KS55UN-150kg	4.7
200kg	651KS55UN-200kg	4.7
250kg	651KS55UN-250kg	4.7
300kg	651KS55UN-300kg	4.7
500kg	651KS55UN-500kg	4.7

* ATEX, FM, IECEx approved versions carry the "-Ex" suffix.

NTEP 1:5 000 Class III, Single Cell;

OIML MAA C5, Y=12 300;

For further available P/N's & specifications per NTEP/OIML classes, please contact us.

INTERCHANGEABLE REFERENCE

Brand	Model
Coti Global	CG-50-1*
HBM	PW16*
Rice Lake	RL1260*
Vishay Tedea-Huntleigh	1260*

** Coti CG-50-1, HBM PW16, Rice Lake RL1260, Vishay Tedea-Huntleigh 1260 are of aluminum.*

AVAILABLE OPTION

■ Aluminum version: 108MAUN (page 74)

SINGLE POINTS

www.anyload.com
© 2025 ANYLOAD V1 dimensions and specifications subject to change without notice

ANYLOAD

Aluminum

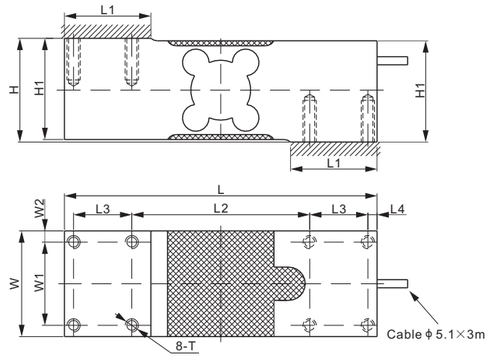

RoHS

DIMENSIONS

RATED CAPACITY	H	H1	L	L1	L2	L3	L4	W	W1	W2	T
108MAUN, 108MAUN-A1:											
kg/mm											
50–1,000	62.3	60.8	188.0	52.0	107.0	35.0	5.5	63.5	50.0	6.8	5/16–18 UNC–2B Depth20
lb/inches (conversion of above dimensions)											
110.23–2,204.62	2.45	2.39	7.40	2.05	4.21	1.38	0.22	2.50	1.97	0.27	5/16–18 UNC–2B Depth0.8
108MA, 108MA-A1:											
kg/mm											
50–1000	62.3	60.8	188.0	52.0	107.0	35.0	5.5	63.5	50.0	6.8	M8 Depth20
lb/inches (conversion of above dimensions)											
110.23–2,204.62	2.45	2.39	7.40	2.05	4.21	1.38	0.22	2.50	1.97	0.27	M8 Depth0.8

SPECIFICATIONS

Maximum Capacity (Emax)	kg	50 / 75 / 100 / 150 / 200 / 250 / 300 / 500 / 635 / 660/ 1000	
Model		108MA/108MAUN	108MA-A1/108MAUN-A1
Accuracy class according to NTEP Class III S		1:3000	1:4000
Maximum number or verification interval (nmax)		3000	4000
Y		12300	
Temperature effect on zero balance	%*Cn/K	±0.00114	
Temperature effect on sensitivity	%*Cn/K	±0.0012	±0.000875
Non-linearity	%*Cn	±0.017	±0.010
Hysteresis Error	%*Cn	±0.017	±0.012
Creep error (30min)/DR	%*Cn	±0.017	±0.012
Full Scale Output (Cn)	mV/V	2±10%	
Zero Balance	mV/V	±0.02	
Recommended voltage	V	10 (15 Maximum)	
Input Resistance	Ω	415±15	
Output Resistance	Ω	350±3	
insulation resistance [50V DC]	GΩ	>2	
Safe overload [Elim]	%*Emax	150	
Breaking overload	%*Emax	300	
Safe side load	%*Emax	100	
Nominal temperture range	°C / °F	-10 to 40 / 14 to 104	
Element Material		Aluminum, Clear Anodized	
Seal type / IP rating		Environmentally Sealed / IP66	
Cable color code		Exc+ Red Exc- Black Sig+ Green Sig- White	

SINGLE POINTS

www.anyload.com
© 2025 ANYLOAD V1 dimensions and specifications subject to change without notice

Aluminum

PART NUMBER*

Metric thread, 1:3000 accuracy

Rated Capacity	Part No.	Weight (kg) Approx.
50kg	108MA-50kg	1.9
75kg	108MA-75kg	1.9
100kg	108MA-100kg	1.9
150kg	108MA-150kg	1.9
200kg	108MA-200kg	1.9
250kg	108MA-250kg	1.9
300kg	108MA-300kg	1.9
500kg	108MA-500kg	1.9
635kg	108MA-635kg	1.9
660kg	108MA-660kg	1.9
1000kg	108MA-1000kg	1.9

Metric thread, 1:4000 accuracy

Rated Capacity	Part No.	Weight (kg) Approx.
50kg	108MA-50kg-A1	1.9
75kg	108MA-75kg-A1	1.9
100kg	108MA-100kg-A1	1.9
150kg	108MA-150kg-A1	1.9
200kg	108MA-200kg-A1	1.9
250kg	108MA-250kg-A1	1.9
300kg	108MA-300kg-A1	1.9
500kg	108MA-500kg-A1	1.9
635kg	108MA-635kg-A1	1.9
660kg	108MA-660kg-A1	1.9
1000kg	108MA-1000kg-A1	1.9

* ATEX, FM, IECEx approved versions carry the "-Ex" suffix.

PART NUMBER*

Imperial thread, 1:3000 accuracy

Rated Capacity	Part No.	Weight (kg) Approx.
50kg	108MAUN-50kg	1.9
75kg	108MAUN-75kg	1.9
100kg	108MAUN-100kg	1.9
150kg	108MAUN-150kg	1.9
200kg	108MAUN-200kg	1.9
250kg	108MAUN-250kg	1.9
300kg	108MAUN-300kg	1.9
500kg	108MAUN-500kg	1.9
635kg	108MAUN-635kg	1.9
660kg	108MAUN-660kg	1.9
1000kg	108MAUN-1000kg	1.9

Imperial thread, 1:4000 accuracy

Rated Capacity	Part No.	Weight (kg) Approx.
50kg	108MAUN-50kg-A1	1.9
75kg	108MAUN-75kg-A1	1.9
100kg	108MAUN-100kg-A1	1.9
150kg	108MAUN-150kg-A1	1.9
200kg	108MAUN-200kg-A1	1.9
250kg	108MAUN-250kg-A1	1.9
300kg	108MAUN-300kg-A1	1.9
500kg	108MAUN-500kg-A1	1.9
635kg	108MAUN-635kg-A1	1.9
660kg	108MAUN-660kg-A1	1.9
1000kg	108MAUN-1000kg-A1	1.9

INTERCHANGEABLE REFERENCE

Manufacturer	Model
108MA	
Mettler-Toledo	MT1260
108MAUN	
Coti Global	CG-50-1
HBM	PW16
Rice Lake	RL26018A
Rice Lake	RLPWM16
Rice Lake	RL1260
Vishay Tedea-Huntleigh	1260

50kg-500kg: NTEP 1:5 000 Class III, Single Cell;
635kg-660kg: NTEP 1:4 000 Class III, Single Cell

50kg-500kg: OIML MAA C6, Y=29 000;
635kg-660kg: OIML MAA C4, Y=4 000

For further definition of P/N's & specifications per NTEP/OIML classes, please contact us.

AVAILABLE OPTION

- stainless steel version of 108MAUN: 651KS55UN (page 73)

SINGLE POINTS

www.anyload.com
© 2025 ANYLOAD V1 dimensions and specifications subject to change without notice

108QS

ANYLOAD

Stainless Steel

RoHS

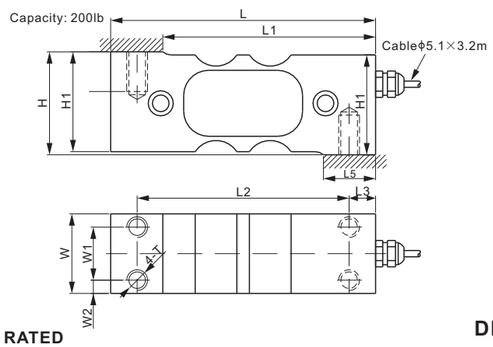

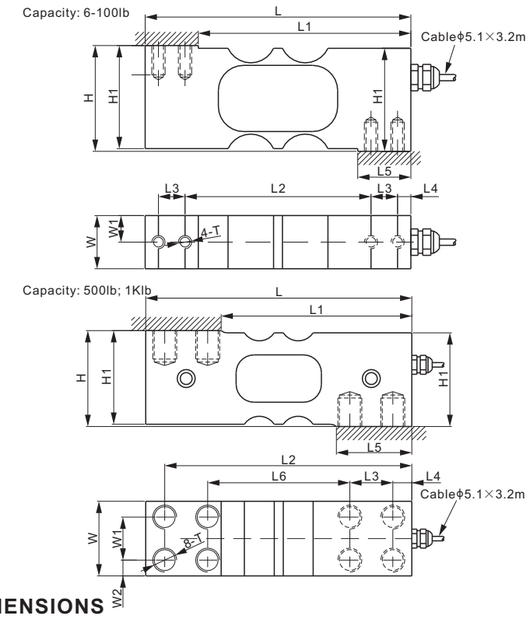

DIMENSIONS

RATED CAPACITY	H	H1	L	L1	L2	L3	L4	L5	L6	W	W1	W2	T
lb/inches													
6	1.99	1.94	5.00	4.00	3.50	0.50	0.25	1.00	–	0.50	0.25	–	1/4–28 UNF
10–100	1.99	1.94	5.00	4.00	3.50	0.50	0.25	1.00	–	1.00	0.50	–	1/4–28 UNF
200	1.94	1.88	5.00	4.02	4.00	0.50	–	1.00	–	1.50	1.00	0.25	M10
500; 1,000	2.52	2.46	7.00	4.02	6.50	1.13	0.50	1.98	3.74	1.96	1.13	0.42	M16
kg/mm (conversion of above dimensions)													
2.72	50.5	49.2	127.0	101.6	88.9	12.7	6.4	25.4	–	12.7	6.4	–	1/4–28 UNF
4.54–45.36	50.5	49.2	127.0	101.6	88.9	12.7	6.4	25.4	–	25.4	12.7	–	1/4–28 UNF
90.72	49.3	47.8	127.0	102.0	101.6	12.7	–	25.4	–	38.1	25.4	6.4	M10
226.80; 453.59	64.0	62.5	177.8	127.4	165.1	28.7	12.7	50.4	95.0	49.8	28.7	10.6	M16

SPECIFICATIONS

Full Scale Output	2.0 mV/V ± 10%	**Recommended Excitation**	10V (15V Maximum)
Zero Balance	± 0.02 mV/V	**Reference Max.Platform Size**	Cap.≤100lb: 400×450 mm Cap.=200lb: 500×550 mm Cap.≥500lb: 650×700 mm
Non-linearity	< ± 0.017%		
Repeatability	< ± 0.017%		
Hysteresis Error	< ± 0.017%	**Insulation Resistance**	>2 [50V DC] GΩ
Creep in 30 min.	< ± 0.023%	**Compensated Temperature Range**	-10°C to 40°C / 14°F to 104°F
Input Resistance	385Ω ± 15	**Safe Overload**	150% of full scale
Output Resistance	350Ω ± 3	**Breaking Overload**	300% of full scale
Element Material	2Cr13 Stainless Steel	**Seal Type / IP Rating**	Environmentally Sealed / IP66
		Cable Color Code	Exc+ Red Exc- Black Sig+ Green Sig- White Shield Bare

PART NUMBER*

Rated Capacity	Part No.	Weight Approx. (kg)
6lb	108QS-6lb-YZ	1.0
10lb	108QS-10lb-YZ	1.0
15lb	108QS-15lb-YZ	1.0
25lb	108QS-25lb-YZ	1.0
50lb	108QS-50lb-YZ	1.0
100lb	108QS-100lb-YZ	1.0
200lb	108QS-200lb-YZ	1.2
500lb	108QS-500lb-YZ	3.0
1Klb	108QS-1Klb-YZ	3.1

* ATEX, FM, IECEx approved versions carry the "-Ex" suffix.

INTERCHANGEABLE REFERENCE

Brand	Model
Cardinal	SP 6-100lb*
Cardinal	SP 200, 500, 1000lb
Coti Global	CG-SPL/CG-SPLM

** SP 6-100lb is of aluminum construction*

SINGLE POINTS

www.anyload.com
© 2025 ANYLOAD V1 dimensions and specifications subject to change without notice

ANYLOAD

108QSFL

Stainless Steel

RoHS

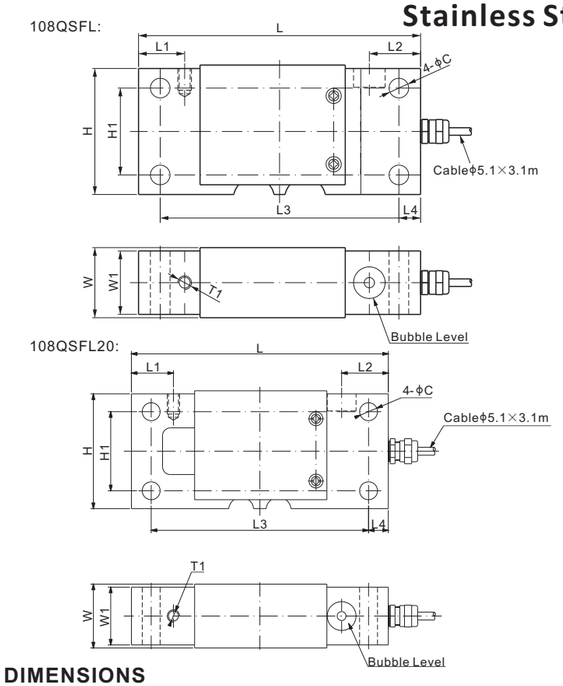

DIMENSIONS

RATED CAPACITY	C	H	H1	L	L1	L2	L3	L4	W	W1	T1
lb/inches											
250	0.45	2.90	2.00	6.50	1.06	1.18	5.50	0.50	1.61	1.46	5/16–18 UNC Depth13
kg/mm (conversion of above dimensions)											
113.4	11.5	73.7	50.8	165.1	27.0	30.0	139.7	12.7	41.0	37.1	5/16–18 UNC Depth0.51

SPECIFICATIONS

Full Scale Output	1.0 mV/V ± 10%	**Recommended Excitation**	10V (15V Maximum)
Zero Balance	± 0.02 mV/V	**Reference Max.Platform Size**	400×450 mm
Non-linearity	< ± 0.020%	**Insulation Resistance**	>2 [50V DC] GΩ
Repeatability	< ± 0.020%	**Compensated Temperature Range**	-10°C to 50°C / 14°F to 122°F
Hysteresis Error	< ± 0.020%	**Safe Overload**	150% of full scale
Creep in 30 min.	< ± 0.030%	**Breaking Overload**	300% of full scale
Input Resistance	385Ω ± 15	**Seal Type / IP Rating**	Environmentally Sealed / IP66
Output Resistance	350Ω ± 3	**Cable Color Code**	Exc+ Red Exc- Black Sig+ Green Sig- White Shield Bare
Element Material	2Cr13 Stainless Steel		

PART NUMBER*

Rated Capacity	Part No.	Weight Approx. (kg)
250lb	108QSFL-250lb-YZ	2.6
	108QSFL-250lb-YZ-01	2.6
Output 2.0mV/V ± 10% Version*:		
250lb	108QSFL20-250lb-YZ-02	2.6

This version is not interchange with FLS or RLFLS
Reference Max. Platform Size: 609x609mm

*ATEX, FM, IECEx approved versions carry the "-Ex" suffix.

INTERCHANGEABLE REFERENCE

Brand	Model
Avery Weigh-Tronix	FLS
Rice Lake	RLFLS

SINGLE POINTS

www.anyload.com
© 2025 ANYLOAD V1 dimensions and specifications subject to change without notice

108PA

ANYLOAD

Aluminum

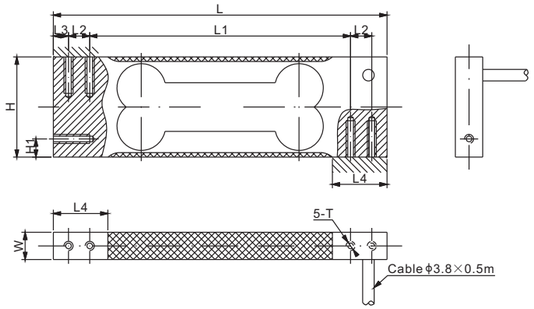

RoHS

DIMENSIONS

RATED CAPACITY	H	H1	L	L1	L2	L3	L4	W	T
kg/mm									
0.2	33.0	6.0	110.0	86.0	7.0	5.0	18.0	5.0	M3 Depth12
0.3-0.6	33.0	6.0	110.0	86.0	7.0	5.0	18.0	9.0	M3 Depth12
0.75-6	33.0	6.0	110.0	86.0	7.0	5.0	18.0	10.0	M3 Depth12
lb/inches (conversion of above dimensions)									
0.44	1.30	0.24	4.33	3.39	0.28	0.20	0.71	0.20	M3 Depth0.47
0.66-1.32	1.30	0.24	4.33	3.39	0.28	0.20	0.71	0.35	M3 Depth0.47
1.65-13.23	1.30	0.24	4.33	3.39	0.28	0.20	0.71	0.39	M3 Depth0.47

SPECIFICATIONS

Full Scale Output	1.0 mV/V ± 20%	**Recommended Excitation**	10V (15V Maximum)
Zero Balance	± 0.02 mV/V	**Reference Max.Platform Size**	Capacity<1kg: 200×200 mm Capacity≥1kg: 230×230 mm
Non-linearity	Cap.<1kg: < ± 0.023%; Cap.≥1kg: < ± 0.017%		
Repeatability	Cap.<1kg: < ± 0.023%; Cap.≥1kg: < ± 0.017%	**Insulation Resistance**	>2［50V DC］GΩ
Hysteresis Error	Cap.<1kg: < ± 0.023%; Cap.≥1kg: < ± 0.017%	**Nominal Temperature Range**	-10°C to 40°C / 14°F to 104°F
Creep in 30 min.	Cap.<1kg: < ± 0.050%; Cap.≥1kg: < ± 0.023%	**Safe Overload**	150% of full scale
Input Resistance	415Ω ± 15	**Breaking Overload**	300% of full scale
Output Resistance	350Ω ± 3	**Seal Type / IP Rating**	Environmentally Sealed / IP66
Element Material	Aluminum, Clear Anodized	**Cable Color Code**	Exc+ Red Exc- Black Sig+ Green Sig- White Shield Bare

PART NUMBER*

Rated Capacity	Part No.	Weight Approx. (kg)
200g	108PA-200g	0.1
300g	108PA-300g	0.1
600g	108PA-600g	0.1
1kg	108PA-1kg	0.1
2kg	108PA-2kg	0.1
3kg	108PA-3kg	0.1
6kg	108PA-6kg	0.1

* ATEX, FM, IECEx approved versions carry the "-Ex" suffix.

INTERCHANGEABLE REFERENCE

Brand	Model
HBM	SPL
Vishay Tedea-Huntleigh	1004

1kg-6kg: OIML C3

For further available P/N's & specifications per OIML classes, please contact us.

SINGLE POINTS

© 2025 ANYLOAD V1 dimensions and specifications subject to change without notice

ANYLOAD

108SA

Aluminum

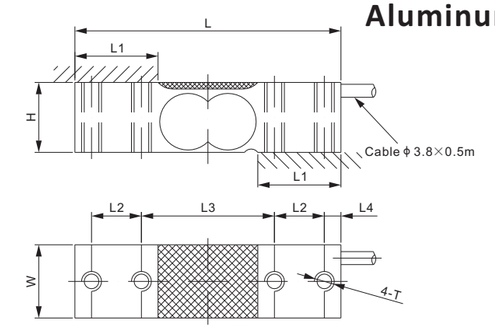

RoHS

DIMENSIONS

RATED CAPACITY	H	L	L1	L2	L3	L4	W	T
kg/mm								
6-30	21.0	80.0	25.0	15.0	40.0	5.0	22.0	M6
lb/inches (conversion of above dimensions)								
13.23-66.14	0.83	3.15	0.98	0.59	1.58	0.20	0.87	M6

SPECIFICATIONS

Full Scale Output	1.5 mV/V ± 10%	**Recommended Excitation**	10V (15V Maximum)
Zero Balance	± 0.02 mV/V	**Reference Max.Platform Size**	250×250 mm
Non-linearity	< ± 0.050%	**Insulation Resistance**	>2［50V DC］GΩ
Repeatability	< ± 0.030%	**Nominal Temperature Range**	-10°C to 40°C / 14°F to 104°F
Hysteresis Error	< ± 0.050%	**Safe Overload**	150% of full scale
Creep in 30 min.	< ± 0.020%	**Breaking Overload**	300% of full scale
Input Resistance	1000Ω ± 3	**Seal Type / IP Rating**	Environmentally Sealed / IP66
Output Resistance	1000Ω ± 3	**Cable Color Code**	Exc+ Red Exc- Black Sig+ Green Sig- White Shield Bare
Element Material	Aluminum, Clear Anodized		

PART NUMBER*

Rated Capacity	Part No.	Weight Approx. (kg)
6kg	108SA-6kg	0.1
10kg	108SA-10kg	0.1
15kg	108SA-15kg	0.1
20kg	108SA-20kg	0.1
30kg	108SA-30kg	0.1

* ATEX, FM, IECEx approved versions carry the "-Ex" suffix.

SINGLE POINTS

© 2025 ANYLOAD V1 dimensions and specifications subject to change without notice

108UA; 108UAUN

ANYLOAD

Aluminum

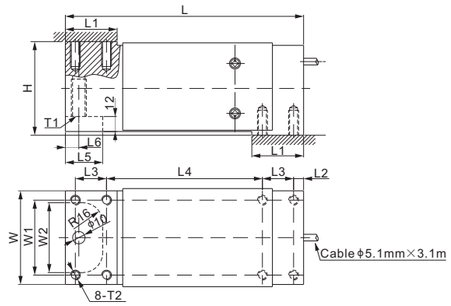

RoHS

DIMENSIONS

RATED CAPACITY	H	L	L1	L2	L3	L4	L5	L6	W	W1	W2	T1	T2
108UA: kg/mm													
50–1,000	75.0	191.0	41.5	8.0	25.0	125.0	30.0	10.8	75.0	60.0	56.0	M12 Depth30	M8 Depth20
lb/inches (conversion of above dimensions)													
110.2–2,204.6	2.95	7.52	1.63	0.31	0.98	4.92	1.18	0.43	2.89	2.36	2.20	M12 Depth1.2	M8 Depth0.8
108UAUN: kg/mm													
30–1,500	75.0	191.0	41.5	8.0	25.0	125.0	30.0	10.8	75.0	60.0	56.0	$\frac{1}{2}$ –20 UNF Depth30	$\frac{5}{16}$ –18 UNC Depth20
lb/inches (conversion of above dimensions)													
66.1–3,306.9	2.95	7.52	1.63	0.31	0.98	4.92	1.18	0.43	2.89	2.36	2.20	$\frac{1}{2}$ –20 UNF Depth1.2	$\frac{5}{16}$ –18 UNC Depth0.8

SPECIFICATIONS

Full Scale Output	2.0 mV/V ± 10%; 108UAUN-300kg-01:2.0 mV/V ± 0.1%	**Recommended Excitation**	10V (15V Maximum)
		Reference Max.Platform Size	750×750 mm
Zero Balance	± 0.02 mV/V	**Insulation Resistance**	>2 [50V DC] GΩ
Non-linearity	< ± 0.017%	**Nominal Temperature Range**	-10°C to 40°C / 14°F to 104°F
Repeatability	< ± 0.017%	**Safe Overload**	150% of full scale
Hysteresis Error	< ± 0.017%	**Breaking Overload**	300% of full scale
Creep in 30 min.	< ± 0.023%	**Seal Type / IP Rating**	Environmentally Sealed / IP66
Input Resistance	415Ω ± 15	**Cable Color Code**	Exc+ Red Exc- Black Sig+ Green Sig- White Shield Bare
Output Resistance	350Ω ± 3		
Element Material	Aluminum, Clear Anodized		

PART NUMBER*

Rated Capacity	Part No.	Weight Approx. (kg)
30kg	108UAUN-30kg-NP	2.7
50kg	108UA-50kg	2.7
	108UAUN-50kg	2.7
100kg	108UA-100kg	2.7
	108UAUN-100kg	2.7
150kg	108UA-150kg	2.7
	108UAUN-150kg	2.7
200kg	108UA-200kg	2.7
	108UAUN-200kg	2.7
300kg	108UA-300kg	2.7
	108UAUN-300kg	2.7
	108UAUN-300kg-01	2.7
500kg	108UA-500kg	2.7
	108UAUN-500kg	2.7
635kg	108UA-635kg	2.7
	108UAUN-635kg	2.7
700kg	108UA-700kg	2.7
	108UAUN-700kg	2.7
1t	108UA-1t	2.7
	108UAUN-1t	2.7
1.5t	108UAUN-1.5t	2.7

* ATEX, FM, IECEx approved versions carry the "-Ex" suffix.
For further available P/N's & specifications per NTEP/OIML classes, please contact us.

INTERCHANGEABLE REFERENCE

108UA

Brand	Model
Cardinal	CHB*

108UAUN

Brand	Model
ANYLOAD	651BAUN
Coti Global	CG-50
FLINTEC	PCB**
HBM	PW12B
HBM	PW12
Rice Lake	RL1250
Rice Lake	RL1218A
Vishay Celtron	LOC
Vishay Revere Transducers	652
Vishay Sensortronics	60060
Vishay Tedea-Huntleigh	1250

** Cardinal CHB is of metric threaded holes, without U-shaped plate.*
*** Flintec PCB is of stainless steel construction, hermetically sealed Flintec PCB has 3 version: PCB, PCBB, PCBC, Anyload's 108UAUN is interchangeable to PCB version.*

30kg-500kg: NTEP 1:5 000 Class III, Single Cell;
635kg-1.5t: NTEP 1:4 000 Class III, Single Cell

30kg:OIML MAA C6, Y=20 000;
50kg-500kg: OIML MAA C6, Y=29 000;
635kg-1.5t: OIML MAA C4, Y=4 000

SINGLE POINTS

www.anyload.com
© 2025 ANYLOAD V1 dimensions and specifications subject to change without notice

ANYLOAD

108TAYM; 108TAYM-01

Aluminum

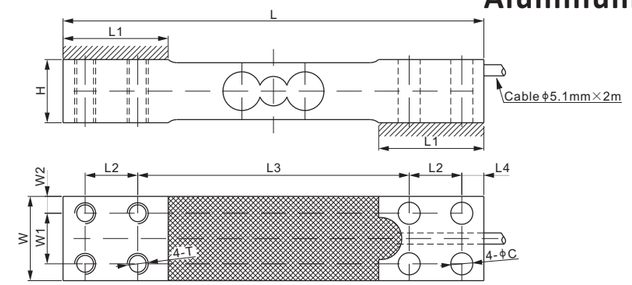

RoHS

DIMENSIONS

RATED CAPACITY	C	H	L	L1	L2	L3	L4	W	W1	W2	T
kg/mm											
75–300	10.5	30.0	200.0	50.0	25.0	129.0	10.5	40.0	24.0	8.0	M10
lb/inches (conversion of above dimensions)											
165–661	0.41	1.18	7.87	1.97	0.98	5.08	0.41	1.57	0.94	0.31	M10

SPECIFICATIONS

Type	YZ108	**Recommended Excitation**	10V (15V Maximum)
Full Scale Output	2 mV/V + 10% / - 20%	**Reference Max.Platform Size**	400×400 mm
Zero Balance	± 0.02 mV/V	**Insulation Resistance**	>2 [50V DC] GΩ
Non-linearity	< ± 0.015%	**Nominal Temperature Range**	-10°C to 40°C / 14°F to 104°F
Repeatability	< ± 0.010%	**Safe Overload**	150% of full scale
Hysteresis Error	< ± 0.015%	**Breaking Overload**	300% of full scale
Creep in 30 min.	< ± 0.016%	**Seal Type / IP Rating**	Environmentally Sealed / IP66
Input Resistance	108TAYM: 385Ω ± 15; 108TAYM-01: 1263Ω ± 30	**Cable Color Code**	Exc+ Red Exc- Black Sig+ Green Sig- White Shield Bare
Output Resistance	108TAYM: 350Ω ± 3; 108TAYM-01: 1000Ω ± 9		
Element Material	Aluminum, Clear Anodized		

PART NUMBER*

Rated Capacity	Part No.	Weight Approx. (kg)
75kg	108TAYM-75kg	1.0
	108TAYM-75kg-01	1.0
150kg	108TAYM-150kg	1.0
	108TAYM-150kg-01	1.0
300kg	108TAYM-300kg	1.0
	108TAYM-300kg-01	1.0

* ATEX, FM, IECEx approved versions carry the "-Ex" suffix.

OIML C3

For further available P/N's & specifications per OIML classes, please contact us.

INTERCHANGEABLE REFERENCE

Brand	Model	Scale Model & Cap.	Load Cell Cap.
108TAYM			
Yamato	UH69	6100-30kg	75kg
Yamato	UH69	6100-60kg	150kg
Yamato	UH69	6100-150kg	300kg
108TAYM-01			
Yamato	UH69	6200-30kg	75kg
Yamato	UH69	6200-60kg	150kg
Yamato	UH69	6200-150kg	300kg

SINGLE POINTS

www.anyload.com
© 2025 ANYLOAD V1 dimensions and specifications subject to change without notice

Aluminum

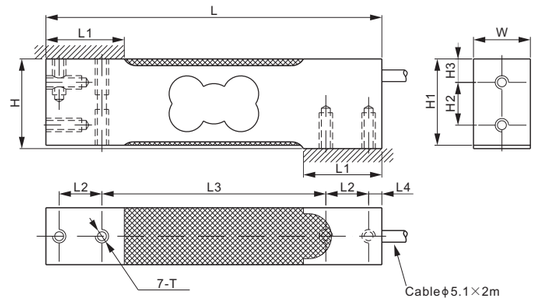

RoHS

DIMENSIONS

RATED CAPACITY	H	H1	H2	H3	L	L1	L2	L3	L4	W	T
108TA, 108TA-A1, 108TA-A2:											
kg/mm											
3-200	40.0	38.5	19.1	10.5	150.0	35.0	19.1	100.0	5.9	25.4	M6 Depth16
lb/inches (conversion of above dimensions)											
6.61-440.92	1.57	1.52	0.75	0.41	5.91	1.38	0.75	3.94	0.23	1.00	M6 Depth0.6
108TAUN, 108TAUN-A1, 108TAUN-A2:											
kg/mm											
3-200	40.0	38.5	19.1	10.5	150.0	35.0	19.1	100.0	5.9	25.4	1/4-20UNC-2B Depth16
lb/inches (conversion of above dimensions)											
6.61-440.92	1.57	1.52	0.75	0.41	5.91	1.38	0.75	3.94	0.23	1.00	1/4-20UNC-2B Depth0.6

SPECIFICATIONS

Maximum Capacity (Emax)	kg	3-200	5-200	5-200
Accuracy class according to NTEP Class III S		1:3000	1:4000	1:5000
Maximum number or verification interval (nmax)		3000	4000	5000
Y		12300		
Temperature effect on zero balance	%*Cn/K	±0.00114		
Temperature effect on sensitivity	%*Cn/K	±0.0012	±0.000875	±0.0007
Non-linearity	%*Cn	±0.017	±0.010	±0.0075
Hysteresis Error	%*Cn	±0.017	±0.012	±0.010
Creep error (30min)/DR	%*Cn	±0.017	±0.012	±0.010
Full Scale Output (Cn)	mV/V	2±10%		
Zero Balance	mV/V	±0.02		
Recommended voltage	V	10 (15 Maximum)		
Input Resistance	Ω	415±15		
Output Resistance	Ω	350±3		
insulation resistance [50V DC]	GΩ	>2		
Safe overload [Elim]	%*Emax	150		
Breaking overload	%*Emax	300		
Safe side load	%*Emax	100		
Nominal temperture range	°C / °F	-10 to 40 / 14 to 104		
Element Material		Aluminum, Clear Anodized		
Seal type / IP rating		Environmentally Sealed / IP66		
Cable color code		Exc+ Red Exc- Black Sig+ Green Sig- White		

SINGLE POINTS

© 2025 ANYLOAD V1 dimensions and specifications subject to change without notice

Aluminum

PART NUMBER*

Metric thread, 1:3000 accuracy

Rated Capacity	Part No.	Weight Approx. (kg)
3kg	108TA-3kg	0.4
5kg	108TA-5kg	0.4
7kg	108TA-7kg	0.4
10kg	108TA-10kg	0.4
15kg	108TA-15kg	0.4
20kg	108TA-20kg	0.4
30kg	108TA-30kg	0.4
50kg	108TA-50kg	0.4
75kg	108TA-75kg	0.4
100kg	108TA-100kg	0.4
150kg	108TA-150kg	0.4
200kg	108TA-200kg	0.4

Metric thread, 1:4000 accuracy

Rated Capacity	Part No.	Weight Approx. (kg)
5kg	108TA-5kg-A1	0.4
7kg	108TA-7kg-A1	0.4
10kg	108TA-10kg-A1	0.4
15kg	108TA-15kg-A1	0.4
20kg	108TA-20kg-A1	0.4
30kg	108TA-30kg-A1	0.4
50kg	108TA-50kg-A1	0.4
75kg	108TA-75kg-A1	0.4
100kg	108TA-100kg-A1	0.4
150kg	108TA-150kg-A1	0.4
200kg	108TA-200kg-A1	0.4

Metric thread, 1:5000 accuracy

Rated Capacity	Part No.	Weight Approx. (kg)
5kg	108TA-5kg-A2	0.4
7kg	108TA-7kg-A2	0.4
10kg	108TA-10kg-A2	0.4
15kg	108TA-15kg-A2	0.4
20kg	108TA-20kg-A2	0.4
30kg	108TA-30kg-A2	0.4
50kg	108TA-50kg-A2	0.4
75kg	108TA-75kg-A2	0.4
100kg	108TA-100kg-A2	0.4
150kg	108TA-150kg-A2	0.4
200kg	108TA-200kg-A2	0.4

* ATEX, FM, IECEx approved versions carry the "-Ex" suffix.

INTERCHANGEABLE PRODUCTS

Brand	Model
108TA	
Flintec	PC42 (20-150kg)*
Vishay Revere Transducers	642C
Vishay Tedea-Huntleigh	1042(metric threads)

** Flintec PC42 has a M8 mounting hole*

PART NUMBER*

Imperial thread, 1:3000 accuracy

Rated Capacity	Part No.	Weight Approx. (kg)
3kg	108TAUN-3kg	0.4
5kg	108TAUN-5kg	0.4
7kg	108TAUN-7kg	0.4
10kg	108TAUN-10kg	0.4
15kg	108TAUN-15kg	0.4
20kg	108TAUN-20kg	0.4
30kg	108TAUN-30kg	0.4
50kg	108TAUN-50kg	0.4
75kg	108TAUN-75kg	0.4
100kg	108TAUN-100kg	0.4
150kg	108TAUN-150kg	0.4
200kg	108TAUN-200kg	0.4

Imperial thread, 1:4000 accuracy

Rated Capacity	Part No.	Weight Approx. (kg)
5kg	108TAUN-5kg-A1	0.4
7kg	108TAUN-7kg-A1	0.4
10kg	108TAUN-10kg-A1	0.4
15kg	108TAUN-15kg-A1	0.4
20kg	108TAUN-20kg-A1	0.4
30kg	108TAUN-30kg-A1	0.4
50kg	108TAUN-50kg-A1	0.4
75kg	108TAUN-75kg-A1	0.4
100kg	108TAUN-100kg-A1	0.4
150kg	108TAUN-150kg-A1	0.4
200kg	108TAUN-200kg-A1	0.4

Imperial thread, 1:5000 accuracy

Rated Capacity	Part No.	Weight Approx. (kg)
5kg	108TAUN-5kg-A2	0.4
7kg	108TAUN-7kg-A2	0.4
10kg	108TAUN-10kg-A2	0.4
15kg	108TAUN-15kg-A2	0.4
20kg	108TAUN-20kg-A2	0.4
30kg	108TAUN-30kg-A2	0.4
50kg	108TAUN-50kg-A2	0.4
75kg	108TAUN-75kg-A2	0.4
100kg	108TAUN-100kg-A2	0.4
150kg	108TAUN-150kg-A2	0.4
200kg	108TAUN-200kg-A2	0.4

INTERCHANGEABLE PRODUCTS

Brand	Model
108TAUN	
Cardinal	TSP
Coti Global	CG-42
HBM	SP4
Rice Lake	RL1042
Rice Lake	RLSP4
Rice Lake	RL42018A
Vishay Revere Transducers	642
Vishay Tedea-Huntleigh	1042(imperial threads)

NTEP 1:5 000 Class III, Single Cell

5kg-30kg: OIML MAA C7.5, Y=20 000;
50kg-200kg: OIML MAA C6, Y=29 000

For further definition of P/N's & specifications per NTEP/OIML classes, please contact us.

SINGLE POINTS

© 2025 ANYLOAD V1 dimensions and specifications subject to change without notice

108TAAD

ANYLOAD

Aluminum

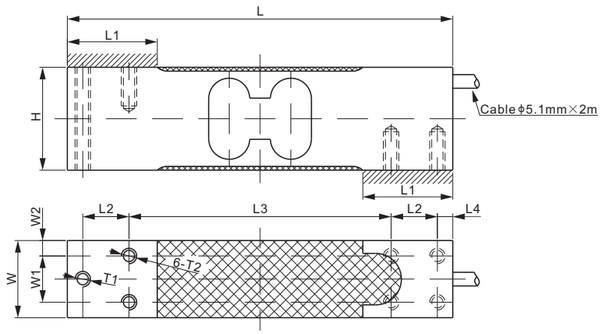

OIML CE ATEX FM APPROVED IECEx RoHS

DIMENSIONS

RATED CAPACITY	H	L	L1	L2	L3	L4	W	W1	W2	T1	T2
kg/mm											
30–150	40.0	150.0	35.0	18.0	102.0	6.0	30.0	18.0	6.0	M6	M6 Depth 15
lb/inches (conversion of above dimensions)											
66–330	1.57	5.91	1.38	0.71	4.02	0.24	1.18	0.71	0.24	M6	M6 Depth 0.6

SPECIFICATIONS

Type	YZ108	**Recommended Excitation**	10V (15V Maximum)
Full Scale Output	1.0 mV/V ± 10%	**Reference Max.Platform Size**	400×400 mm
Zero Balance	± 0.02 mV/V	**Insulation Resistance**	>2 [50V DC] GΩ
Non-linearity	< ± 0.017%	**Nominal Temperature Range**	-10°C to 40°C / 14°F to 104°F
Repeatability	< ± 0.017%	**Safe Overload**	150% of full scale
Hysteresis Error	< ± 0.017%	**Breaking Overload**	300% of full scale
Creep in 30 min.	< ± 0.023%	**Seal Type / IP Rating**	Environmentally Sealed / IP66
Input Resistance	415Ω ± 15	**Cable Color Code**	Exc+ Red Exc- Black Sig+ Green Sig- White Shield Bare
Output Resistance	350Ω ± 3		
Element Material	Aluminum, Clear Anodized		

PART NUMBER*

Rated Capacity	Part No.	Weight Approx. (kg)
30kg	108TAAD-30kg	0.5
60kg	108TAAD-60kg	0.5
150kg	108TAAD-150kg	0.5

* ATEX, FM, IECEx approved versions carry the "-Ex" suffix.

OIML C3

For further available P/N's & specifications per OIML classes, please contact us.

INTERCHANGEABLE REFERENCE

Brand	Model
A&D	LC-4102

SINGLE POINTS

www.anyload.com
© 2025 ANYLOAD V1 dimensions and specifications subject to change without notice

ANYLOAD

108TAAL

Aluminum

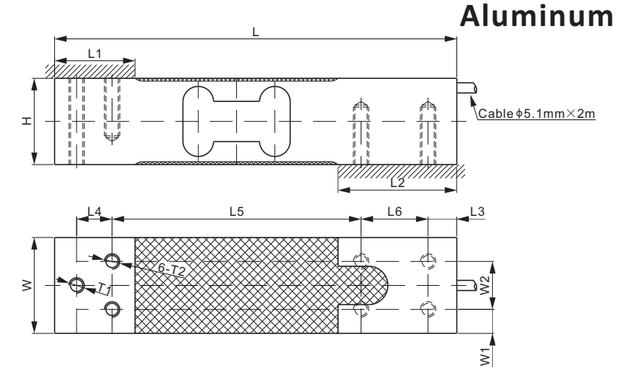

OIML CE ATEX FM APPROVED IECEx RoHS

DIMENSIONS

RATED CAPACITY	H	L	L1	L2	L3	L4	L5	L6	W	W1	W2	T1	T2
kg/mm													
30–150	45.0	210.0	42.0	62.0	15.0	18.5	130.0	35.0	50.0	12.5	25.0	M8	M8 Depth30
lb/inches (conversion of above dimensions)													
66–330	1.77	8.27	1.65	2.44	0.59	0.73	5.12	1.38	1.97	0.49	0.98	M8	M8 Depth1.2

SPECIFICATIONS

Type	YZ108	**Recommended Excitation**	10V (15V Maximum)
Full Scale Output	1.0 mV/V ± 10%	**Reference Max.Platform Size**	400×400 mm
Zero Balance	± 0.02 mV/V	**Insulation Resistance**	>2 [50V DC] GΩ
Non-linearity	< ± 0.017%	**Nominal Temperature Range**	-10°C to 40°C / 14°F to 104°F
Repeatability	< ± 0.017%	**Safe Overload**	150% of full scale
Hysteresis Error	< ± 0.017%	**Breaking Overload**	300% of full scale
Creep in 30 min.	< ± 0.023%	**Seal Type / IP Rating**	Environmentally Sealed / IP66
Input Resistance	415Ω ± 15	**Cable Color Code**	Exc+ Red Exc- Black Sig+ Green Sig- White Shield Bare
Output Resistance	350Ω ± 3		
Element Material	Aluminum, Clear Anodized		

PART NUMBER*

Rated Capacity	Part No.	Weight Approx. (kg)
30kg	108TAAL-30kg	1.2
60kg	108TAAL-60kg	1.2
100kg	108TAAL-100kg	1.2
150kg	108TAAL-150kg	1.2

* ATEX, FM, IECEx approved versions carry the "-Ex" suffix.

OIML C3

For further available P/N's & specifications per OIML classes, please contact us.

INTERCHANGEABLE REFERENCE

Brand	Model
A&D	LC-4103

SINGLE POINTS

www.anyload.com
© 2025 ANYLOAD V1 dimensions and specifications subject to change without notice

108TS; 108TSUN

ANYLOAD

Stainless Steel

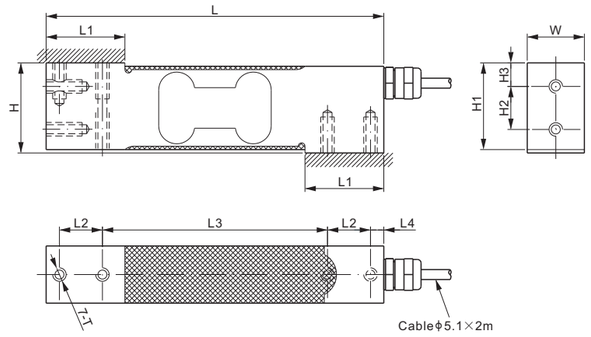

CE ATEX FM APPROVED IECEx RoHS

DIMENSIONS

RATED CAPACITY	H	H1	H2	H3	L	L1	L2	L3	L4	W	T
108TS: kg/mm											
5-150	40.0	38.5	19.1	10.5	150.0	35.0	19.1	100.0	5.9	25.4	M6 Depth16
lb/inches (conversion of above dimensions)											
11.02-330.69	1.57	1.52	0.75	0.41	5.91	1.38	0.75	3.94	0.23	1.00	M6 Depth0.63
108TSUN: kg/mm											
5-150	40.0	38.5	19.1	10.5	150.0	35.0	19.1	100.0	5.9	25.4	1/4-20UNC-2B Depth16
lb/inches (conversion of above dimensions)											
11.02-330.69	1.57	1.52	0.75	0.41	5.91	1.38	0.75	3.94	0.23	1.00	1/4-20UNC-2B Depth0.63

SPECIFICATIONS

Full Scale Output	2.0 mV/V ± 10%	**Recommended Excitation**	10V (15V Maximum)
Zero Balance	± 0.02 mV/V	**Reference Max.Platform Size**	450×500 mm
Non-linearity	< ± 0.017%	**Insulation Resistance**	>2 [50V DC] GΩ
Repeatability	< ± 0.017%	**Compensated Temperature Range**	-10°C to 50°C / 14°F to 122°F
Hysteresis Error	< ± 0.017%	**Safe Overload**	150% of full scale
Creep in 30 min.	< ± 0.023%	**Breaking Overload**	300% of full scale
Input Resistance	385Ω ± 15	**Seal Type / IP Rating**	Environmentally Sealed / IP66
Output Resistance	350Ω ± 3	**Cable Color Code**	Exc+ Red Exc- Black
Element Material	2Cr13 Stainless Steel		Sig+ Green Sig- White Shield Bare

PART NUMBER*

Rated Capacity	Part No.	Weight Approx. (kg)
5kg	108TS-5kg-YZ	0.9
	108TSUN-5kg-YZ	0.9
10kg	108TS-10kg-YZ	0.9
	108TSUN-10kg-YZ	0.9
15kg	108TS-15kg-YZ	0.9
	108TSUN-15kg-YZ	0.9
20kg	108TS-20kg-YZ	0.9
	108TSUN-20kg-YZ	0.9
30kg	108TS-30kg-YZ	1.0
	108TSUN-30kg-YZ	1.0
50kg	108TS-50kg-YZ	1.0
	108TSUN-50kg-YZ	1.0
75kg	108TS-75kg-YZ	1.0
	108TSUN-75kg-YZ	1.0
100kg	108TS-100kg-YZ	1.0
	108TSUN-100kg-YZ	1.0
150kg	108TS-150kg-YZ	1.0
	108TSUN-150kg-YZ	1.0

* ATEX, FM, IECEx approved versions carry the "-Ex" suffix.

INTERCHANGEABLE REFERENCE

Brand	Model
108TS	
Cardinal	TSSP*
FLINTEC	PC1 (30-100kg)
HBM	PW15A
Vishay Tedea-Huntleigh	1142
108TSUN	
HBM	PW15
Rice Lake	RL1140
Rice Lake	RL1385**
Vishay Tedea-Huntleigh	1140

** The mounting hole TSSP is of M10*
*** RL1385 comes with 3 mounting holes, 108TSUN comes with 2 mounting holes which match the outer 2 mounting holes of RL1385*

SINGLE POINTS

www.anyload.com
© 2025 ANYLOAD V1 dimensions and specifications subject to change without notice

ANYLOAD

108TSLL

Stainless Steel

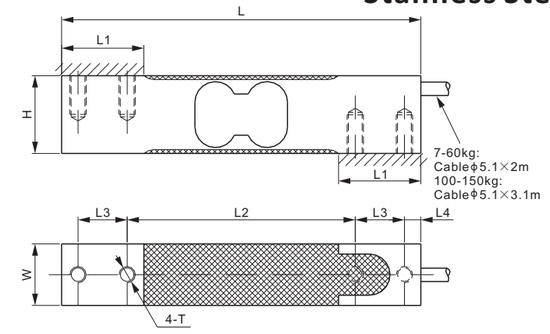

CE ATEX FM APPROVED IECEx RoHS

DIMENSIONS

RATED CAPACITY	H	L	L1	L2	L3	L4	W	T
kg/mm								
7-15	30.2	139.7	32.0	88.7	19.1	6.4	19.1	1/4-20UNC-2B Depth15
30-60	30.2	139.7	32.0	88.7	19.1	6.4	23.9	1/4-20UNC-2B Depth15
100-150	30.7	139.7	38.0	79.2	22.3	7.8	30.2	3/8-16UNC-2B Depth15
lb/inches (conversion of above dimensions)								
15.4-33.1	1.19	5.50	1.26	3.49	0.75	0.25	0.75	1/4-20UNC-2B Depth0.6
66.1-132.3	1.19	5.50	1.26	3.49	0.75	0.25	0.94	1/4-20UNC-2B Depth0.6
220.5-330.7	1.21	5.50	1.50	3.12	0.88	0.31	1.19	3/8-16UNC-2B Depth0.6

SPECIFICATIONS

Full Scale Output	2.0 mV/V ± 10%	**Recommended Excitation**	10V (15V Maximum)
Zero Balance	± 0.02 mV/V	**Reference Max.Platform Size**	400×400 mm
Non-linearity	< ± 0.017%	**Insulation Resistance**	>2 [50V DC] GΩ
Repeatability	< ± 0.017%	**Compensated Temperature Range**	-10°C to 50°C / 14°F to 122°F
Hysteresis Error	< ± 0.017%	**Safe Overload**	150% of full scale
Creep in 30 min.	< ± 0.023%	**Breaking Overload**	300% of full scale
Input Resistance	385Ω ± 15	**Seal Type / IP Rating**	Environmentally Sealed / IP66
Output Resistance	350Ω ± 3	**Cable Color Code**	Exc+ Red Exc- Black
Element Material	2Cr13 Stainless Steel		Sig+ Green Sig- White Shield Bare

PART NUMBER*

Rated Capacity	Part No.	Weight Approx. (kg)
7kg	108TSLL-7kg-YZ	0.7
10kg	108TSLL-10kg-YZ	0.7
15kg	108TSLL-15kg-YZ	0.7
30kg	108TSLL-30kg-YZ	0.7
60kg	108TSLL-60kg-YZ	0.7
100kg	108TSLL-100kg-YZ	0.7
150kg	108TSLL-150kg-YZ	0.7

* ATEX, FM, IECEx approved versions carry the "-Ex" suffix.

INTERCHANGEABLE REFERENCE

Brand	Model
Coti Global	CG-PWS
HBM	PWS
Rice Lake	RL1380

SINGLE POINTS

www.anyload.com
© 2025 ANYLOAD V1 dimensions and specifications subject to change without notice

108TSST

ANYLOAD

Stainless Steel

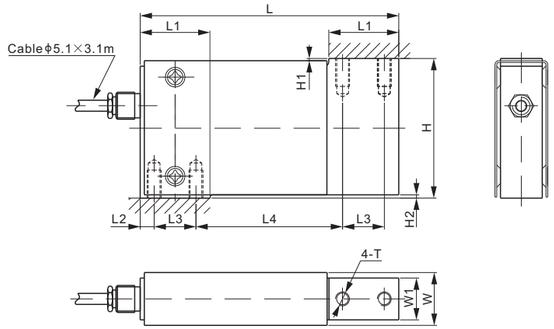

CE ATEX FM APPROVED IECEx RoHS

DIMENSIONS

RATED CAPACITY	H	H1	H2	L	L1	L2	L3	L4	W	W1	T
lb/inches											
10-100	2.50	0.04	0.06	4.63	1.25	0.25	0.75	2.63	0.95	0.75	1/4-28 UNF-2B Depth0.5
kg/mm (conversion of above dimensions)											
4.54-45.4	63.5	1.0	1.5	117.6	31.8	6.40	19.0	66.7	24.1	19.0	1/4-28 UNF-2B Depth12.7

SPECIFICATIONS

Full Scale Output	2.0 mV/V ± 10%	**Recommended Excitation**	10V (15V Maximum)
Zero Balance	± 0.02 mV/V	**Reference Max.Platform Size**	Capacity≤25lb: 200×250 mm Capacity≥50lb: 300×300 mm
Non-linearity	< ± 0.017%		
Repeatability	< ± 0.017%	**Insulation Resistance**	>2 [50V DC] GΩ
Hysteresis Error	< ± 0.017%	**Compensated Temperature Range**	-10°C to 50°C / 14°F to 122°F
Creep in 30 min.	< ± 0.023%	**Safe Overload**	150% of full scale
Input Resistance	385Ω ± 15	**Breaking Overload**	300% of full scale
Output Resistance	350Ω ± 5	**Seal Type / IP Rating**	Environmentally Sealed / IP66
Element Material	2Cr13 Stainless Steel	**Cable Color Code**	Exc+ Red Exc- Black Sig+ Green Sig- White Shield Bare

PART NUMBER*

Rated Capacity	Part No.	Weight Approx. (kg)
10lb	108TSST-10lb-YZ	0.9
15lb	108TSST-15lb-YZ	0.9
25lb	108TSST-25lb-YZ	0.9
50lb	108TSST-50lb-YZ	0.9
100lb	108TSST-100lb-YZ	0.9

* ATEX, FM, IECEx approved versions carry the "-Ex" suffix.

INTERCHANGEABLE REFERENCE

Brand	Model
Coti Global	CG-51
Vishay Sensortronics	60051

SINGLE POINTS

www.anyload.com
© 2025 ANYLOAD V1 dimensions and specifications subject to change without notice

ANYLOAD

108TSVS

Stainless Steel

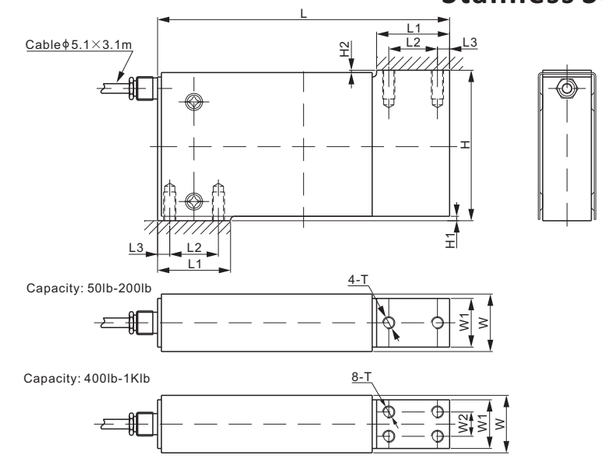

CE ATEX FM APPROVED IECEx RoHS

DIMENSIONS

RATED CAPACITY	H	H1	H2	L	L1	L2	L3	W	W1	W2	T
lb/inches											
50-200	3.09	0.09	0.04	6.00	1.50	1.00	0.25	1.18	1.00	-	1/4-28 UNF-2B Depth0.75
400-500	3.09	0.09	0.04	6.00	1.50	1.00	0.25	1.18	1.00	0.50	1/4-28 UNF-2B Depth0.75
1,000	3.09	0.09	0.18	6.00	1.50	1.00	0.25	1.69	1.50	1.00	5/16-24 UNF-2B Depth0.75
kg/mm (conversion of above dimensions)											
22.7-90.8	78.5	2.3	1.2	152.4	38.1	25.4	6.4	30.0	25.4	-	1/4-28 UNF-2B Depth19.0
181.6-227	78.5	2.3	1.2	152.4	38.1	25.4	6.4	30.0	25.4	12.7	1/4-28 UNF-2B Depth19.0
454	78.5	2.3	4.6	152.4	38.1	25.4	6.4	43.0	38.1	25.4	5/16-24 UNF-2B Depth19.0

SPECIFICATIONS

Full Scale Output	2.0 mV/V ± 10%	**Recommended Excitation**	10V (15V Maximum)
Zero Balance	± 0.02 mV/V	**Reference Max.Platform Size**	Capacity≤500lb: 500×500 mm Capacity≥1Klb: 750×750 mm
Non-linearity	< ± 0.017%		
Repeatability	< ± 0.017%	**Insulation Resistance**	>2 [50V DC] GΩ
Hysteresis Error	< ± 0.017%	**Compensated Temperature Range**	-10°C to 50°C / 14°F to 122°F
Creep in 30 min.	< ± 0.023%	**Safe Overload**	150% of full scale
Input Resistance	385Ω ± 15	**Breaking Overload**	300% of full scale
Output Resistance	350Ω ± 5	**Seal Type / IP Rating**	Environmentally Sealed / IP66
Element Material	2Cr13 Stainless Steel	**Cable Color Code**	Exc+ Red Exc- Black Sig+ Green Sig- White Shield Bare

PART NUMBER*

Rated Capacity	Part No.	Weight Approx. (kg)
50lb	108TSVS-50lb-YZ	1.8
100lb	108TSVS-100lb-YZ	1.8
200lb	108TSVS-200lb-YZ	1.8
400lb	108TSVS-400lb-YZ	1.8
500lb	108TSVS-500lb-YZ	1.8
1Klb	108TSVS-1Klb-YZ	2.6

* ATEX, FM, IECEx approved versions carry the "-Ex" suffix.

INTERCHANGEABLE REFERENCE

Brand	Model
Coti Global	CG-60048
Vishay Sensortronics	60048

SINGLE POINTS

www.anyload.com
© 2025 ANYLOAD V1 dimensions and specifications subject to change without notice

108WH

ANYLOAD

Alloy Steel

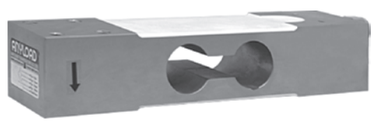

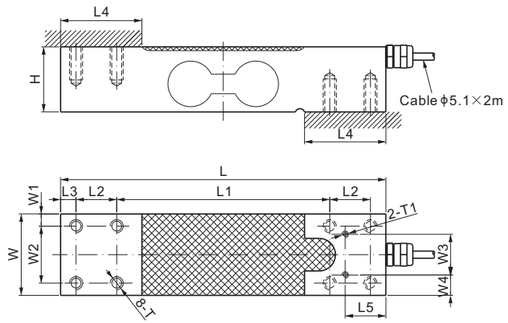

CE ATEX FM APPROVED IECEx RoHS

DIMENSIONS

RATED CAPACITY	H	L	L1	L2	L3	L4	L5	W	W1	W2	W3	W4	T	T1
kg/mm														
300~1,000	40.0	200.0	131.0	25.0	9.5	50.0	25.0	50.0	7.5	35.0	25.0	12.5	M8 Depth20	M4 Depth5
lb/inches (conversion of above dimensions)														
661.4~2,204.6	1.57	7.87	5.16	0.98	0.37	1.97	0.98	1.97	0.30	1.38	0.98	0.49	M8 Depth0.79	M4 Depth0.20

SPECIFICATIONS

Full Scale Output	2.0 mV/V ± 10%	**Recommended Excitation**	10V (15V Maximum)
Zero Balance	± 0.02 mV/V	**Reference Max.Platform Size**	600×700 mm
Non-linearity	< ± 0.017%	**Insulation Resistance**	>2 [50V DC] GΩ
Repeatability	< ± 0.017%	**Compensated Temperature Range**	-10°C to 50°C / 14°F to 122°F
Hysteresis Error	< ± 0.017%	**Safe Overload**	150% of full scale
Creep in 30 min.	< ± 0.023%	**Breaking Overload**	300% of full scale
Input Resistance	400Ω ± 15	**Seal Type / IP Rating**	Environmentally Sealed / IP66
Output Resistance	350Ω ± 3	**Cable Color Code**	Exc+ Red Exc- Black
Element Material	Alloy Steel, Nickel Plated		Sig+ Green Sig- White Shield Bare

SINGLE POINTS

PART NUMBER*

Rated Capacity	Part No.	Weight Approx. (kg)
300kg	108WH-300kg	2.7
400kg	108WH-400kg	2.7
500kg	108WH-500kg	2.7
750kg	108WH-750kg	2.7
1t	108WH-1t	2.7

* ATEX, FM, IECEx approved versions carry the "-Ex" suffix.

www.anyload.com
© 2025 ANYLOAD V1 dimensions and specifications subject to change without notice

ANYLOAD

108WSLP

Stainless Steel

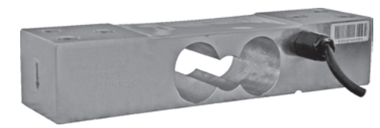

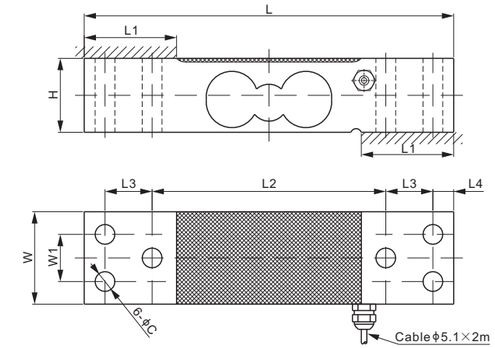

CE ATEX FM APPROVED IECEx RoHS

DIMENSIONS

RATED CAPACITY	C	H	L	L1	L2	L3	L4	W	W1
kg/mm									
150	10.7	40	200	50	126.5	25.5	11.25	50	25.5
lb/inches (conversion of above dimensions)									
330.7	0.42	1.57	7.87	1.97	4.98	1.00	0.44	1.97	1.00

SPECIFICATIONS

Full Scale Output	2.0 mV/V ± 10%	**Recommended Excitation**	10V (15V Maximum)
Zero Balance	± 0.02 mV/V	**Reference Max.Platform Size**	400×400 mm
Non-linearity	< ± 0.017%	**Insulation Resistance**	>2 [50V DC] GΩ
Repeatability	< ± 0.017%	**Compensated Temperature Range**	-10°C to 50°C / 14°F to 122°F
Hysteresis Error	< ± 0.017%	**Safe Overload**	150% of full scale
Creep in 30 min.	< ± 0.023%	**Breaking Overload**	300% of full scale
Input Resistance	385Ω ± 15	**Seal Type / IP Rating**	Environmentally Sealed / IP66
Output Resistance	350Ω ± 3	**Cable Color Code**	Exc+ Red Exc- Black
Element Material	2Cr13 Stainless Steel		Sig+ Green Sig- White Shield Bare

PART NUMBER*

Rated Capacity	Part No.	Weight Approx. (kg)
150kg	108WSLP-150kg-YZ	2.3

* ATEX, FM, IECEx approved versions carry the "-Ex" suffix.

INTERCHANGEABLE REFERENCE

Brand	Model
Mettler-Toledo	0756

SINGLE POINTS

www.anyload.com
© 2025 ANYLOAD V1 dimensions and specifications subject to change without notice

651AA

ANYLOAD

Aluminum

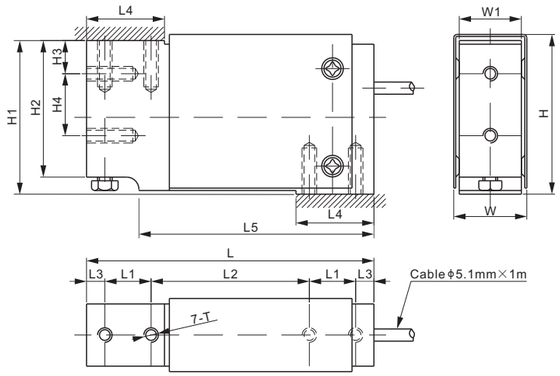

CE ATEX FM APPROVED IECEx RoHS

DIMENSIONS

RATED CAPACITY	H	H1	H2	H3	H4	L	L1	L2	L3	L4	L5	W	W1	T
kg/mm														
10–100	65.5	63.0	56.0	13.6	25.4	118.0	19.1	65.0	7.5	32.0	96.5	30.0	25.5	M6X1 Depth19
lb/inches (conversion of above dimensions)														
22–220.5	2.58	2.48	2.21	0.54	1.00	4.65	0.75	2.56	0.30	1.26	3.80	1.18	1.00	M6X1 Depth0.75

SPECIFICATIONS

Full Scale Output	2.0 mV/V ± 10%	**Recommended Excitation**	10V (15V Maximum)
Zero Balance	± 0.02 mV/V	**Reference Max.Platform Size**	400×400 mm
Non-linearity	< ± 0.017%	**Insulation Resistance**	>2 [50V DC] GΩ
Repeatability	< ± 0.017%	**Nominal Temperature Range**	-10°C to 40°C / 14°F to 104°F
Hysteresis Error	< ± 0.017%	**Safe Overload**	150% of full scale
Creep in 30 min.	< ± 0.023%	**Breaking Overload**	300% of full scale
Input Resistance	415Ω ± 15	**Seal Type / IP Rating**	Environmentally Sealed / IP66
Output Resistance	350Ω ± 3	**Cable Color Code**	Exc+ Red Exc- Black
Element Material	Aluminum, Clear Anodized		Sig+ Green Sig- White Shield Bare

PART NUMBER*

Rated Capacity	Part No.	Weight Approx. (kg)
10kg	651AA-10kg	0.5
15kg	651AA-15kg	0.5
30kg	651AA-30kg	0.5
50kg	651AA-50kg	0.5
100kg	651AA-100kg	0.5

* ATEX, FM, IECEx approved versions carry the "-Ex" suffix.

INTERCHANGEABLE REFERENCE

Brand	Model
Coti Global	CG-1010
HBM	SP10*
Rice Lake	RL1010*
Vishay Tedea-Huntleigh	1010*
Vishay Tedea-Huntleigh	1015

** HBM SP10, Rice Lake RL1010, Vishay Tedea-Huntleigh 1010 are of imperial thread 1/4"-20 UNC*

SINGLE POINTS

www.anyload.com
© 2025 ANYLOAD V1 dimensions and specifications subject to change without notice

ANYLOAD

651HS

Stainless Steel

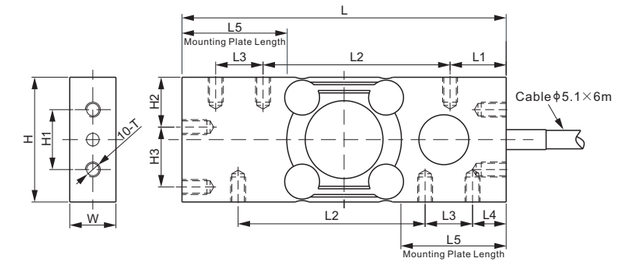

CE ATEX FM APPROVED IECEx RoHS

DIMENSIONS

RATED CAPACITY	H	H1	H2	H3	L	L1	L2	L3	L4	L5	W	T
kg/mm												
6–30	50.0	24.0	20.0	24.0	130.0	22.5	75.0	19.0	13.5	39.0	18.5	M6 Depth10
50; 60	50.0	24.0	20.0	24.0	130.0	22.5	75.0	19.0	13.5	39.0	23.5	M6 Depth10
lb/inches (conversion of above dimensions)												
13.23–66.14	1.97	0.95	0.79	0.95	5.12	0.89	2.96	0.75	0.53	1.54	0.73	M6 Depth0.39
110.23; 132.28	1.97	0.95	0.79	0.95	5.12	0.89	2.96	0.75	0.53	1.54	0.93	M6 Depth0.39

SPECIFICATIONS

Full Scale Output	2.0 mV/V ± 1%	Recommended Excitation	10V (15V Maximum)
Zero Balance	± 0.02 mV/V	Reference Max.Platform Size	350×350 mm
Non-linearity	< ± 0.030%	Insulation Resistance	>2 [50V DC] GΩ
Repeatability	< ± 0.020%	Nominal Temperature Range	-10°C to 50°C / 14°F to 122°F
Hysteresis Error	< ± 0.030%	Safe Overload	150% of full scale
Creep in 30 min.	< ± 0.030%	Breaking Overload	300% of full scale
Input Resistance	385Ω ± 15	Seal Type / IP Rating	Welded Seal / IP68/IP69K
Output Resistance	350Ω ± 3	Cable Color Code	Exc+ Red Exc- Black
Element Material	17-4PH Stainless Steel		Sig+ Green Sig- White Shield Bare

PART NUMBER*

Rated Capacity	Part No.	Weight Approx. (kg)
6kg	651HS-6kg	0.9
12kg	651HS-12kg	0.9
20kg	651HS-20kg	0.9
30kg	651HS-30kg	0.9
50kg	651HS-50kg	1.1
60kg	651HS-60kg	1.1

* ATEX, FM, IECEx approved versions carry the "-Ex" suffix.

NTEP 1:10 000 Class III, Single Cell;

12kg-60kg: OIML MAA C9, Y=18 000

For further available P/N's & specifications per NTEP/OIML classes, please contact us.

INTERCHANGEABLE REFERENCE

Brand	Model
Vishay Revere Transducers	HPSM

SINGLE POINTS

www.anyload.com
© 2025 ANYLOAD V1 dimensions and specifications subject to change without notice

651JS

Stainless Steel

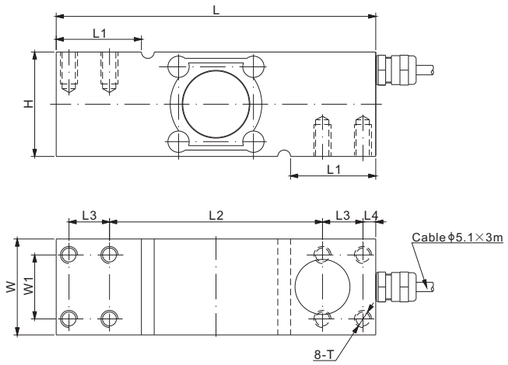

RoHS

DIMENSIONS

RATED CAPACITY	H	L	L1	L2	L3	L4	W	W1	T
kg/mm									
50–400	49.0	150.0	40.0	100.0	19.0	6.0	45.0	30.0	M8 Depth15
lb/inches (conversion of above dimensions)									
110.2–881.9	1.9	5.9	1.6	3.9	0.75	0.2	1.8	1.2	M8 Depth0.6

SPECIFICATIONS

Full Scale Output	2.0 mV/V ± 10%	**Recommended Excitation**	10V (15V Maximum)
Zero Balance	± 0.02 mV/V	**Reference Max.Platform Size**	600×600 mm
Non-linearity	< ± 0.03%	**Insulation Resistance**	>2 [50V DC] GΩ
Repeatability	< ± 0.03%	**Compensated Temperature Range**	-10°C to 50°C / 14°F to 122°F
Hysteresis Error	< ± 0.02%	**Safe Overload**	150% of full scale
Creep in 30 min.	< ± 0.03%	**Breaking Overload**	300% of full scale
Input Resistance	1100Ω ± 50	**Seal Type / IP Rating**	Welded Seal / IP68/IP69K
Output Resistance	1000Ω ± 5	**Cable Color Code**	Exc+ Red Exc- Black
Element Material	17-4PH Stainless Steel		Sig+ Green Sig- White Shield Bare

PART NUMBER*

Rated Capacity	Part No.	Weight Approx. (kg)
50kg	651JS-50kg	2.1
75kg	651JS-75kg	2.1
200kg	651JS-200kg	2.2
400kg	651JS-400kg	2.2

* ATEX, FM, IECEx approved versions carry the "-Ex" suffix.

50kg - 75kg: NTEP 1:10 000 Class III, Single Cell;
200kg - 400kg: NTEP 1:5 000 Class III, Single Cell;

50kg - 75kg: OIML MAA C9, Y=18 000;
200kg - 400kg: OIML MAA C4, Y=26 000

For further available P/N's & specifications per NTEP/OIML classes, please contact us.

INTERCHANGEABLE REFERENCE

Model	Model
651JS-50kg	108JA-50kg*
651JS-75kg	108JA-75kg*
651JS-75kg	108JA-LE75kg*
651JS-200kg	108JA-SE200kg*
651JS-400kg	108JA-SE400kg*

** Most dimensions are the same, except overall height (H on the drawing): 651JS all capacities at 49mm(1.9inch), while 108JA-50kg & 108JA-75kg 25mm(0.98inch), 108JA-LE75kg, 108JA-SE200kg, 108JA-SE400kg 40mm(1.57inch).*

SINGLE POINTS

www.anyload.com
© 2025 ANYLOAD V1 dimensions and specifications subject to change without notice

651KS22; 651KSGS

Stainless Steel

651KS22

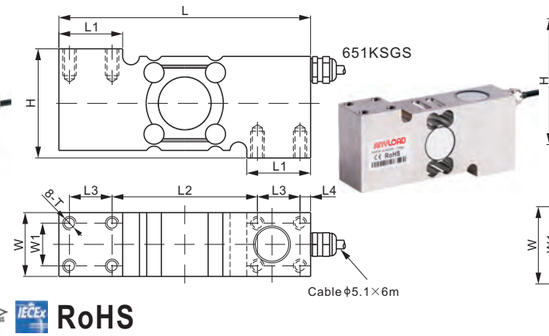

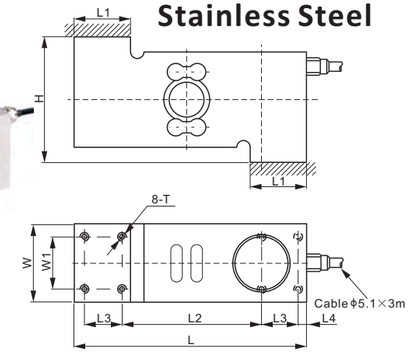

RoHS

DIMENSIONS

RATED CAPACITY	H	L	L1	L2	L3	L4	W	W1	T
651KS22: kg/mm									
50–500	65.0	150.0	38.0	86.6	25.4	6.3	38.0	25.4	M8 Depth16
lb/inches (conversion of above dimensions)									
110.2–1102.3	2.56	5.91	1.50	3.41	1.00	0.25	1.50	1.00	M8 Depth0.63
651KSGS: kg/mm									
100–250	73.0	150.0	38.1	86.5	25.4	6.4	38.0	25.4	M8 Depth12
lb/inches (conversion of above dimensions)									
220.5–551.2	2.87	5.91	1.50	3.41	1.00	0.25	1.50	1.00	M8 Depth0.47

SPECIFICATIONS

Full Scale Output	2.0 mV/V ± 10%	**Recommended Excitation**	10V (15V Maximum)
Zero Balance	± 0.02 mV/V	**Reference Max.Platform Size**	600×600 mm
Non-linearity	651KS22: < ± 0.03%; 651KSGS: < ± 0.05%	**Insulation Resistance**	>2 [50V DC] GΩ
Repeatability	< ± 0.02%	**Compensated Temperature Range**	-10°C to 50°C / 14°F to 122°F
Hysteresis Error	651KS22: < ± 0.03%; 651KSGS: < ± 0.05%	**Safe Overload**	150% of full scale
Creep in 30 min.	< ± 0.03%	**Breaking Overload**	300% of full scale
Input Resistance	385Ω ± 15	**Seal Type / IP Rating**	651KS22: Welded Seal / IP68/IP69K
Output Resistance	350Ω ± 3		651KSGS: Environmentally Sealed / IP66
Element Material	17-4PH Stainless Steel	**Cable Color Code**	Exc+ Red Exc- Black
			Sig+ Green Sig- White Shield Bare

PART NUMBER*

Rated Capacity	Part No.	Weight Approx. (kg)
50kg	651KS22-50kg	2.3
100kg	651KS22-100kg	2.3
	651KSGS-100kg	2.5
250kg	651KS22-250kg	2.3
	651KSGS-250kg	2.5
500kg	651KS22-500kg	2.3
	651KSGS-500kg	2.5

* ATEX, FM, IECEx approved versions carry the "-Ex" suffix.

651KS22-50kg: NTEP 1:10 000 Class III, Single Cell;
651KS22-100kg,250kg &500kg: NTEP 1:5 000 Class III, Single Cell;

651KS22-50kg & 100kg: OIML MAA C9, Y=18 000;
651KS22-250kg & 500kg: OIML MAA C4, Y=26 000

For further available P/N's & specifications per NTEP/OIML classes, please contact us.

INTERCHANGEABLE REFERENCE

651KS22

Brand	Model
Flintec	PC7*
Mettler-Toledo	SSH
Vishay Tedea-Huntleigh	1510*

** H of Flintec PC7 & Tedea 1510 are of 73mm.*

SINGLE POINTS

www.anyload.com
© 2025 ANYLOAD V1 dimensions and specifications subject to change without notice

651KS66

ANYLOAD

Stainless Steel

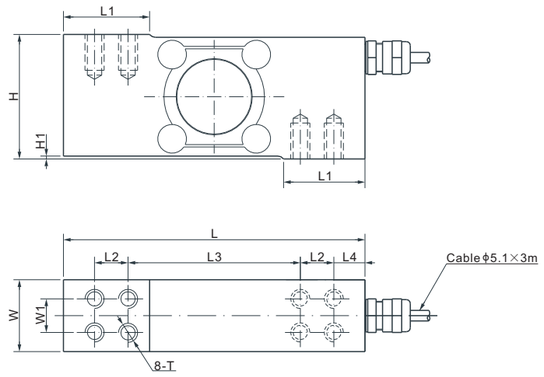

RoHS

DIMENSIONS

RATED CAPACITY	H	H1	L	L1	L2	L3	L4	W	W1	T
kg/mm										
LE10-LE200	48.0	1.2	122.0	36.0	15.2	67.8	16.3	30.0	15.2	M6 Depth15
lb/inches (conversion of above dimensions)										
LE22.05-LE440.92	1.89	0.05	4.80	1.42	0.60	2.67	0.64	1.18	0.60	M6 Depth0.59

SPECIFICATIONS

Full Scale Output	2.0 mV/V ± 5%	**Recommended Excitation**	10V (15V Maximum)
Zero Balance	± 0.02 mV/V	**Reference Max.Platform Size**	610×700 mm
Non-linearity	< ± 0.03%	**Insulation Resistance**	>2 [50V DC] GΩ
Repeatability	< ± 0.02%	**Compensated Temperature Range**	-10°C to 50°C / 14°F to 122°F
Hysteresis Error	< ± 0.03%	**Safe Overload**	150% of full scale
Creep in 30 min.	< ± 0.02%	**Breaking Overload**	300% of full scale
Input Resistance	1100Ω ± 50	**Seal Type / IP Rating**	Welded Seal / IP68/IP69K
Output Resistance	960Ω ± 50	**Cable Color Code**	Exc+ Red Exc- Black
Element Material	17-4PH Stainless Steel		Sig+ Green Sig- White Shield Bare

PART NUMBER*

Rated Capacity	Part No.	Weight Approx. (kg)
LE10kg	651KS66-LE10kg	1.32
LE20kg	651KS66-LE20kg	1.32
LE50kg	651KS66-LE50kg	1.32
LE100kg	651KS66-LE100kg	1.32
LE200kg	651KS66-LE200kg	1.32

* ATEX, FM, IECEx approved versions carry the "-Ex" suffix.

10kg - 50kg: NTEP 1:10 000 Class III, Single Cell;
100kg - 200kg: NTEP 1:5 000 Class III, Single Cell;

10kg - 100kg: OIML MAA C9, Y=18 000;
200kg: OIML MAA C4, Y=26 000

For further available P/N's & specifications per NTEP/OIML classes, please contact us.

INTERCHANGEABLE REFERENCE

Brand	Model
Flintec	PC6

AVAILABLE OPTIONS

■ Imperial thread 1/4-20 UNC available

SINGLE POINTS

www.anyload.com
© 2025 ANYLOAD V1 dimensions and specifications subject to change without notice

ANYLOAD

651KSBC; 651KSBCUN

Stainless Steel

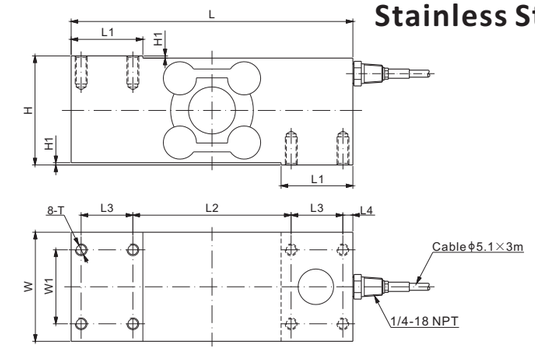

RoHS

DIMENSIONS

RATED CAPACITY	H	H1	L	L1	L2	L3	L4	W	W1	T
651KSBC: kg/mm										
100-250	73.7	1.50	190.5	48.5	107.0	35.0	6.75	73.7	50.0	M8 Depth19.0
lb/inches (conversion of above dimensions)										
220.2-551.2	2.90	0.06	7.50	1.91	4.21	1.38	0.27	2.90	1.97	M8 Depth0.75
651KSBCUN: kg/mm										
100-500	73.7	1.50	190.5	48.5	107.0	35.0	6.75	73.7	50.0	5/16-18 UNC Depth19.0
lb/inches (conversion of above dimensions)										
220.5-1102.3	2.90	0.06	7.50	1.91	4.21	1.38	0.27	2.90	1.97	5/16-18 UNC Depth0.75

SPECIFICATIONS

Full Scale Output	2.0 mV/V ± 0.25%	**Recommended Excitation**	10V (15V Maximum)
Zero Balance	± 0.02 mV/V	**Reference Max.Platform Size**	800×800 mm
Non-linearity	< ± 0.03%	**Insulation Resistance**	>2 [50V DC] GΩ
Repeatability	< ± 0.02%	**Compensated Temperature Range**	-10°C to 50°C / 14°F to 122°F
Hysteresis Error	< ± 0.03%	**Safe Overload**	150% of full scale
Creep in 30 min.	< ± 0.03%	**Breaking Overload**	300% of full scale
Input Resistance	1100Ω ± 50	**Seal Type / IP Rating**	Welded Seal / IP68/IP69K
Output Resistance	960Ω ± 50	**Cable Color Code**	Exc+ Red Exc- Black
Element Material	17-4PH Stainless Steel		Sig+ Green Sig- White Shield Bare

PART NUMBER*

Rated Capacity	Part No.	Weight Approx. (kg)
100kg	651KSBC-100kg	6.2
	651KSBCUN-100kg	6.2
250kg	651KSBC-250kg	6.3
	651KSBCUN-250kg	6.3
500kg	651KSBCUN-500kg	6.5

* ATEX, FM, IECEx approved versions carry the "-Ex" suffix.

NTEP 1:5 000 Class III, Single Cell

100kg: OIML MAA C9, Y=18 000;
250kg-500kg: OIML MAA C4, Y=26 000

For further available P/N's & specifications per NTEP/OIML classes, please contact us.

INTERCHANGEABLE REFERENCE

Brand	Model
651KSBC	
Flintec	PCB*
651KSBCUN	
Flintec	PCB*
Rice Lake	RLPCBC-60

** Flintec PCB has 3 versions: PCB, PCBB, PCBC. Anyload's 651KSBC is interchangeable with PCBC metric thread, 651KSBCUN PCBC imperial thread.*

SINGLE POINTS

www.anyload.com
© 2025 ANYLOAD V1 dimensions and specifications subject to change without notice

651TA; 651TAUN

ANYLOAD

Aluminum

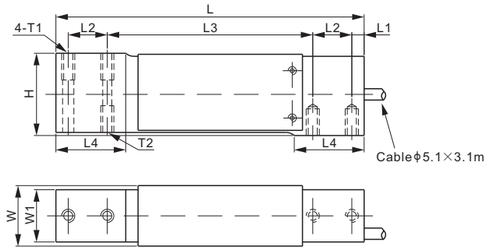

CE ATEX FM APPROVED IECEx RoHS

DIMENSIONS

RATED CAPACITY	H	L	L1	L2	L3	L4	W	W1	T1	T2
651TA:										
kg/mm										
10-200	40.0	150.0	6.0	19.0	100.0	34.0	29.4	25.4	M6 Depth13	M6 Depth13
lb/inches (conversion of above dimensions)										
22.05-440.92	1.57	5.91	0.23	0.75	3.94	1.34	1.16	1.00	M6 Depth0.51	M6 Depth0.51
651TAUN:										
kg/mm										
10-200	40.0	150.0	6.0	19.0	100.0	34.0	29.4	25.4	1/4-20 UNC Depth13	1/4-28 UNF Depth13
lb/inches (conversion of above dimensions)										
22.05-440.92	1.57	5.91	0.23	0.75	3.94	1.34	1.16	1.00	1/4-20 UNC Depth0.51	1/4-28 UNF Depth0.51

SPECIFICATIONS

Full Scale Output	2.0 mV/V ± 10%	**Recommended Excitation**	10V (15V Maximum)
Zero Balance	± 0.02 mV/V	**Reference Max.Platform Size**	450×500 mm
Non-linearity	< ± 0.017%	**Insulation Resistance**	>2 [50V DC] GΩ
Repeatability	< ± 0.017%	**Nominal Temperature Range**	-10°C to 40°C / 14°F to 104°F
Hysteresis Error	< ± 0.017%	**Safe Overload**	150% of full scale
Creep in 30 min.	< ± 0.023%	**Breaking Overload**	300% of full scale
Input Resistance	415Ω ± 15	**Seal Type / IP Rating**	Environmentally Sealed, Potted / IP66
Output Resistance	350Ω ± 3	**Cable Color Code**	Exc+ Red Exc- Black
Element Material	Aluminum, Clear Anodized		Sig+ Green Sig- White Shield Bare

PART NUMBER*

Rated Capacity	Part No.	Weight Approx. (kg)
10kg	651TA-10kg	0.5
	651TAUN-10kg	0.5
15kg	651TA-15kg	0.5
	651TAUN-15kg	0.5
20kg	651TA-20kg	0.5
	651TAUN-20kg	0.5
30kg	651TA-30kg	0.5
	651TAUN-30kg	0.5
50kg	651TA-50kg	0.5
	651TAUN-50kg	0.5
75kg	651TA-75kg	0.5
	651TAUN-75kg	0.5
100kg	651TA-100kg	0.5
	651TAUN-100kg	0.5
200kg	651TA-200kg	0.5
	651TAUN-200kg	0.5

* ATEX, FM, IECEx approved versions carry the "-Ex" suffix.

INTERCHANGEABLE REFERENCE

Brand	Model
651TA	
Mettler-Toledo	MT1041
Vishay Tedea-Huntleigh	1040 (mounting hole: M6)
Vishay Tedea-Huntleigh	1041 (mounting hole: M6)
651TAUN	
Coti Global	CG-40
Rice Lake	RL1040
Vishay Celtron	LOC
Vishay Tedea-Huntleigh	1040 (mounting hole: 1/4"-28UNF)
Vishay Tedea-Huntleigh	1041 (mounting hole: 1/4"-28UNF)

SINGLE POINTS

© 2025 ANYLOAD V1 dimensions and specifications subject to change without notice

ANYLOAD

106BH

Alloy Steel

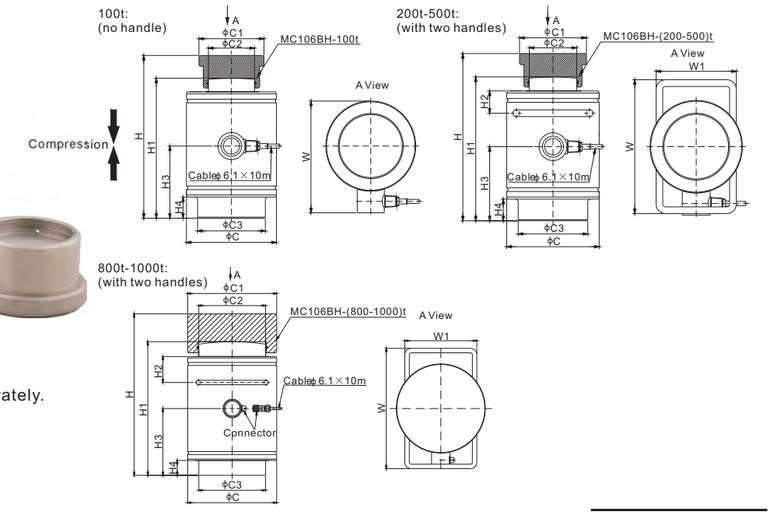

CE ATEX FM APPROVED IECEx RoHS

Mounting hardware to be ordered separately.

Material of MC106BH is alloy steel

DIMENSIONS

RATED CAPACITY	C	C1	C2	C3	H	H1	H2	H3	H4	W	W1
t/mm											
100	155.0	84.0	59.0	95.0	223.0	185.0	/	94.0	30.0	195.0	-
200	166.0	120.0	85.0	125.0	300.0	258.0	40.0	133.0	39.0	240.0	144.0
300	166.0	135.0	100.0	140.0	320.0	275.0	40.0	145.0	47.0	240.0	144.0
500	268.0	175.0	127.0	180.0	425.0	365.0	60.0	192.5	60.0	352.0	144.0
800-1000	240.0	240.0	180.0	180.0	435.0	360.0	70.0	180.0	40.0	324.0	194.0
Klb/inches (conversion of above dimensions)											
220.46	6.10	3.31	2.32	3.74	8.78	7.28	/	3.70	1.18	7.68	-
440.92	6.54	4.72	4.92	4.92	11.81	10.16	1.57	5.24	1.54	9.45	5.67
661.39	6.54	5.31	3.94	5.51	12.60	10.83	1.57	5.71	1.85	9.45	5.67
1,102.31	10.55	6.89	7.09	7.09	16.73	14.37	2.36	7.58	2.36	13.86	5.67
1,763.70-2,204.62	9.45	9.45	7.01	7.01	17.13	14.17	2.76	7.09	1.57	12.76	7.64

SPECIFICATIONS

Full Scale Output	2.0 mV/V ± 0.25%	**Recommended Excitation**	10V (15V Maximum)
Zero Balance	± 0.04 mV/V	**Insulation Resistance**	>2 [50V DC] GΩ
Non-linearity	< ± 0.050%	**Compensated Temperature Range**	-10°C to 50°C / 14°F to 122°F
Repeatability	< ± 0.017%	**Safe Overload**	150% of full scale
Hysteresis Error	< ± 0.030%	**Breaking Overload**	300% of full scale
Creep in 30 min.	< ± 0.023%	**Seal Type / IP Rating**	Welded Seal / IP67
Input Resistance	770Ω ± 30	**Cable Color Code**	Exc+ Red Exc- Black
Output Resistance	700Ω ± 5		Sig+ Green Sig- White
Element Material	Alloy Steel, Nickel Plated		Shield Bare

PART NUMBER*

Load Cell

Rated Capacity	Part No.	Weight Approx. (kg)
100t	106BH-100t	9.6
200t	106BH-200t-HL	28.7
300t	106BH-300t-HL	37.8
500t	106BH-500t-HL	77.0
800t	106BH-800t-HL	116.6
1000t	106BH-1000t-HL	116.6

* ATEX, FM, IECEx approved versions carry the "-Ex" suffix.

PART NUMBER

Mounting Hardware

Mounting Hardware	Load Cell Capacity	Part No.	Shipping Weight (kg)
Mounting Cap	100t	MC106BH-100t	1.4
	200t	MC106BH-200t	3.6
	300t	MC106BH-300t	11.3
	500t	MC106BH-500t	11.3
	800t	MC106BH-800t	30.5
	1000t	MC106BH-1000t	30.5

CANISTERS & DISKS

© 2025 ANYLOAD V1 dimensions and specifications subject to change without notice

106CS; 106CS20

ANYLOAD

Stainless Steel

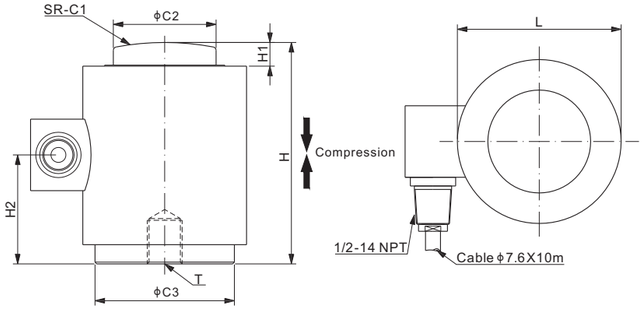

RoHS

DIMENSIONS

RATED CAPACITY	C1	C2	C3	H	H1	H2	L	T
Klb/inches								
10-50	6.00	1.25	2.44	3.25	0.39	1.68	2.76	1/2-20 UNF-2B Depth0.63
100	6.00	2.32	3.15	5.00	0.51	2.46	3.70	3/4-16 UNF-2B Depth0.98
200	17.00	3.13	5.28	7.25	1.04	3.28	5.91	3/4-16 UNF-2B Depth0.98
t/mm								
10-25	152.4	31.8	62.0	82.6	9.8	42.7	70.0	M12×1.75-6H Depth16
40-50	152.4	59.0	80.0	127.0	13.0	62.5	94.0	M20×2.50-6H Depth25
100	431.8	79.5	134.2	184.2	26.4	83.3	150.0	M20×2.50-6H Depth25

SPECIFICATIONS

Full Scale Output	106CS: 1.75 mV/V ± 0.25% 106CS20: 2.0 mV/V ± 0.25%	**Recommended Excitation**	10V (15V Maximum)
		Insulation Resistance	>2 [50V DC] GΩ
Zero Balance	± 0.02 mV/V	**Compensated Temperature Range**	-10°C to 50°C / 14°F to 122°F
Non-linearity	< ± 0.023%	**Safe Overload**	150% of full scale
Repeatability	< ± 0.030%	**Breaking Overload**	300% of full scale
Hysteresis Error	< ± 0.030%	**Seal Type / IP Rating**	Welded Seal / IP68
Creep in 30 min.	< ± 0.030%	**Cable Color Code**	Exc+ Red Exc- Black Sig+ Green Sig- White Shield Bare
Input Resistance	450Ω ± 4.5		
Output Resistance	480Ω ± 4.5		
Element Material	2Cr13 Stainless Steel		

PART NUMBER*

Rated Capacity	Part No.	Weight Approx. (kg)
10t	106CS-10t-YZ	2.9
	106CS20-10t-YZ	2.9
15t	106CS-15t-YZ	2.9
	106CS20-15t-YZ	2.9
25t	106CS-25t-YZ	2.9
	106CS20-25t-YZ	2.9
40t	106CS-40t-YZ	6.0
	106CS20-40t-YZ	6.0
50t	106CS-50t-YZ	6.0
	106CS20-50t-YZ	6.0
100t	106CS-100t-YZ	12.5
	106CS20-100t-YZ	12.5
10Klb	106CS20-10Klb-YZ	2.9
25Klb	106CS-25Klb-YZ	2.9
	106CS20-25Klb-YZ	2.9
50Klb	106CS-50Klb-YZ	2.9
	106CS20-50Klb-YZ	2.9
100Klb	106CS-100Klb-YZ	6.0
	106CS20-100Klb-YZ	6.0
200Klb	106CS-200Klb-YZ	12.5
	106CS20-200Klb-YZ	12.5

* ATEX, FM, IECEx approved versions carry the "-Ex" suffix.

INTERCHANGEABLE REFERENCE

Brand	Model
106CS	
Cardinal	CP1
Coti Global	CG-175
Vishay Revere Transducers	CP
Vishay Revere Transducers	392B
106CS20	
Coti Global	CG-26S5
Rice Lake	RLCSP1
Vishay Revere Transducers	CSP
Vishay Revere Transducers	692B

CANISTERS & DISKS

www.anyload.com
© 2025 ANYLOAD V1 dimensions and specifications subject to change without notice

ANYLOAD

106ES

Stainless Steel

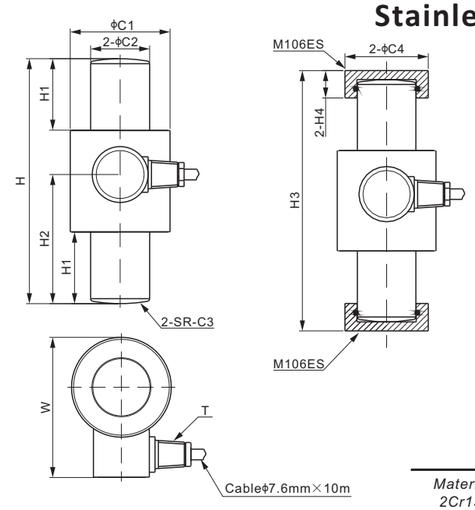

RoHS

Mounting hardware to be ordered separately.

Material of M106ES is 2Cr13 stainless steel

DIMENSIONS

RATED CAPACITY	C1	C2	C3	C4	H	H1	H2	H3	H4	W	T
Klb/inches											
50-100	2.95	1.73	11.0	2.49	7.25	2.11	3.82	7.78	0.82	4.18	1/2-14 NPT
kg/mm (conversion of above dimensions)											
22,680-45,360	75.0	44.4	280.0	63.3	184.0	53.7	97.0	197.6	20.8	106.2	1/2-14 NPT

SPECIFICATIONS

Full Scale Output	2.0 mV/V ± 1%	**Recommended Excitation**	10V (15V Maximum)
Zero Balance	± 0.02 mV/V	**Insulation Resistance**	>2 [50V DC] GΩ
Non-linearity	< ± 0.030%	**Compensated Temperature Range**	-10°C to 50°C / 14°F to 122°F
Repeatability	< ± 0.023%	**Safe Overload**	150% of full scale
Hysteresis Error	< ± 0.023%	**Breaking Overload**	300% of full scale
Creep in 30 min.	< ± 0.030%	**Seal Type / IP Rating**	Welded Seal / IP68
Input Resistance	1100Ω ± 50	**Cable Color Code**	Exc+ Red Exc- Black Sig+ Green Sig- White Shield Bare
Output Resistance	1000Ω ± 10		
Element Material	2Cr13 Stainless Steel		

PART NUMBER*

Load Cell

Rated Capacity	Part No.	Weight Approx. (kg)
50Klb	106ES-50Klb-YZ	3.6
100Klb	106ES-100Klb-YZ	4.1

Mounting Hardware

Mounting Hardware	Load Cell Capacity	Part No.	Weight Approx. (kg)
Mounting Cap	(50-100)Klb	M106ES-(50-100)Klb-YZ	0.3

* ATEX, FM, IECEx approved versions carry the "-Ex" suffix.

INTERCHANGEABLE REFERENCE

Brand	Model
Cardinal	SCA
Coti Global	CG-26S

NTEP 1:10 000 Class IIIL, Multiple Cell

OIML MAA C3, Y=16 000

For further available P/N's & specifications per NTEP/OIML classes, please contact us.

CANISTERS & DISKS

www.anyload.com
© 2025 ANYLOAD V1 dimensions and specifications subject to change without notice

106HS

ANYLOAD

Stainless Steel

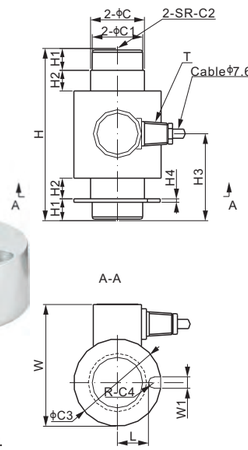

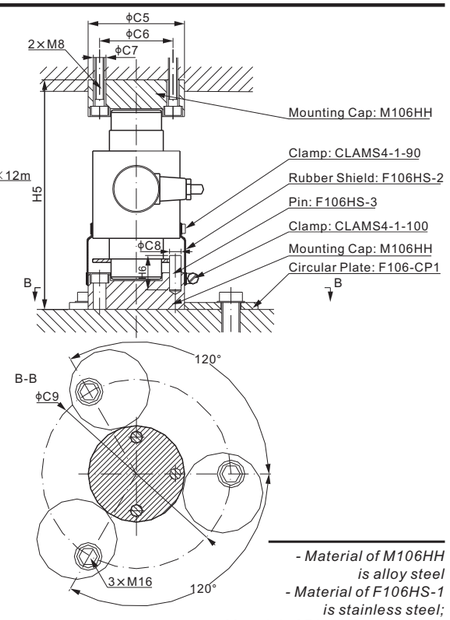

RoHS

Mounting hardware to be ordered separately.

- Material of M106HH is alloy steel
- Material of F106HS-1 is stainless steel;
- Material of F106HS-2 is rubber;
- Material of F106HS-3 & F106-CP1 is mild steel

DIMENSIONS

RATED CAPACITY	C	C1	C2	C3	C4	C5	C6	C7	C8	C9	H	H1	H2	H3	H4	H5	H6	L	W	W1	T
t/mm																					
20	47	44	130	75	5	84	64	11	9.5	165	150	19	18	80	3	200	35	27	106	10	1/2-14 NPT
30	47	44	160	75	5	84	64	11	9.5	165	150	19	18	80	3	200	35	27	106	10	1/2-14 NPT
40	47	44	160	75	5	84	64	11	9.5	165	150	19	18	80	3	200	35	27	106	10	1/2-14 NPT
lb/inches (conversion of above dimensions)																					
44,092.5	1.85	1.73	5.12	2.95	0.20	3.31	2.52	0.43	0.37	6.50	5.91	0.75	0.71	3.15	0.12	7.87	1.38	1.06	4.17	0.39	1/2-14 NPT
66,138.7	1.85	1.73	6.30	2.95	0.20	3.31	2.52	0.43	0.37	6.50	5.91	0.75	0.71	3.15	0.12	7.87	1.38	1.06	4.17	0.39	1/2-14 NPT
88,184.9	1.85	1.73	6.30	2.95	0.20	3.31	2.52	0.43	0.37	6.50	5.91	0.75	0.71	3.15	0.12	7.87	1.38	1.06	4.17	0.39	1/2-14 NPT

SPECIFICATIONS

Full Scale Output	2.0 mV/V ± 0.25%	**Recommended Excitation**	10V (15V Maximum)
Zero Balance	± 0.02 mV/V	**Insulation Resistance**	>2 [50V DC] GΩ
Non-linearity	< ± 0.023%	**Compensated Temperature Range**	-10°C to 50°C / 14°F to 122°F
Repeatability	< ± 0.023%	**Safe Overload**	150% of full scale
Hysteresis Error	< ± 0.023%	**Breaking Overload**	300% of full scale
Creep in 30 min.	< ± 0.030%	**Seal Type / IP Rating**	Welded Seal / IP68
Input Resistance	700Ω ± 20	**Cable Color Code**	Exc+ Red Exc- Black Sig+ Green Sig- White Shield Bare
Output Resistance	705Ω ± 5		
Element Material	2Cr13 Stainless Steel		

PART NUMBER**

Load Cell

Rated Capacity	Part No.	Weight Approx. (kg)
20t	106HS-20t-YZ	3.8
30t	106HS-30t-YZ	3.8
40t	106HS-40t-YZ	3.8

Mounting Hardware

Mounting Hardware	Load Cell Capacity	Part No.	Weight Approx. (kg)
Mounting Cap	(20-40)t	M106HH-(20-40)t	1.3
Mounting Kit*	(20-40)t	106HS-(20-40)t-PARTS	3.2

** Mounting kit includes: 2 pcs Mounting Caps, 2 pcs Clamps, 1 pcs Rubber Shield, 1 pcs Pin, 3 pcs Circular Plates.*

** ATEX, FM, IECEx approved versions carry the "-Ex" suffix.

INTERCHANGEABLE REFERENCE

Brand	Model
Coti Global	CG-26S4
HBM	C16
Vishay Revere Transducers	ASC*

** 106HS with mounts is interchangeable with ASC load cell with mounts.*

NTEP 1:10 000 Class IIIL, Multiple Cell

OIML MAA C3, Y=16 000

For further available P/N's & specifications per NTEP/OIML classes, please contact us.

CANISTERS & DISKS

www.anyload.com
© 2025 ANYLOAD V1 dimensions and specifications subject to change without notice

ANYLOAD

106HSCP

Stainless Steel

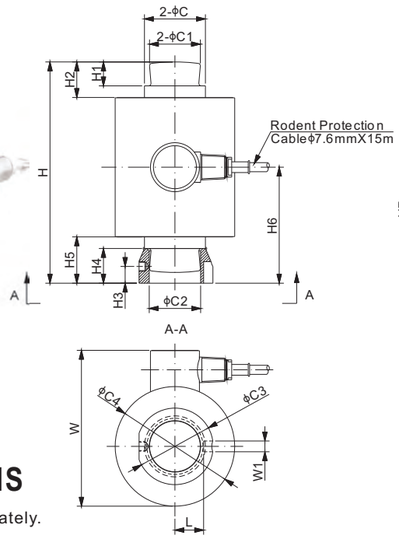

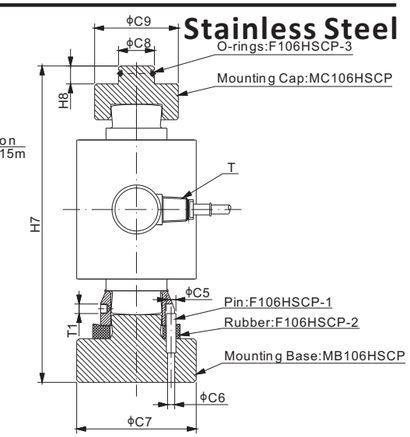

RoHS

Mounting hardware to be ordered separately.

- Material of MC106HSCP, MB106HSCP & F106HSCP-1 is 17-4PH stainless steel;
- Material of F106HSCP-2 & F106HSCP-3 is rubber

DIMENSIONS

RATED CAPACITY	C	C1	C2	C3	C4	C5	C6	C7	C8	C9	H	H1	H2
t/mm													
35	51.0	42.5	43.0	64.0	100.0	8.0	6.0	100.0	30.0	70.0	185.0	20.0	29.7
Klb/inches (conversion of above dimensions)													
77.16	2.01	1.67	1.69	2.52	3.94	0.31	0.24	3.94	1.18	2.76	7.28	0.79	1.17

RATED CAPACITY	H3	H4	H5	H6	H7	H8	L	W	W1	T	T1
t/mm											
35	14.0	29.0	38.7	97.0	264.5	15.0	24.0	130.3	9.0	1/2-14 NPT	M8 Depth5
Klb/inches (conversion of above dimensions)											
77.16	0.55	1.14	1.52	3.82	10.41	0.59	0.94	5.13	0.35	1/2-14 NPT	M8 Depth0.2

SPECIFICATIONS

Full Scale Output	2.0 mV/V ± 0.25%	**Recommended Excitation**	10V (15V Maximum)
Zero Balance	± 0.02 mV/V	**Insulation Resistance**	>2 [50V DC] GΩ
Non-linearity	< ± 0.03%	**Compensated Temperature Range**	-10°C to 50°C / 14°F to 122°F
Repeatability	< ± 0.02%	**Safe Overload**	150% of full scale
Hysteresis Error	< ± 0.02%	**Breaking Overload**	300% of full scale
Creep in 30 min.	< ± 0.02%	**Seal Type / IP Rating**	Welded Seal / IP68
Input Resistance	700Ω ± 20	**Cable Color Code**	Exc+ Red Exc- Black Sig+ Green Sig- White Shield Bare
Output Resistance	705Ω ± 5		
Element Material	17-4PH Stainless Steel		

PART NUMBER**

Load Cell

Rated Capacity	Part No.	Weight Approx. (kg)
35t	106HSCP-35t	6.9
	106HSCP-35t-FP*	10.2

Mounting Hardware

Mounting Hardware	Load Cell Capacity	Part No.	Weight Approx. (kg)
Mounting Cap	35t	MC106HSCP-35t	0.8
Mounting Base	35t	MB106HSCP-35t	2.4
Pin	35t	F106HSCP-1-35t	0.012
Rubber	35t	F106HSCP-2-35t	0.002
O-Ring	35t	F106HSCP-3-35t	0.001

** 106HSCP-FP includes: 1 unit each of load cell, mounting cap, mounting base, pin, rubber, o-ring.*

* *ATEX, FM, IECEx approved versions carry the "-Ex" suffix.

INTERCHANGEABLE REFERENCE

Brand	Model
Bilanciai	CPR-M

NTEP 1:10 000 Class IIIL, Multiple Cell

OIML MAA C3, Y=16 000

For further available P/N's & specifications per NTEP/OIML classes, please contact us.

CANISTERS & DISKS

www.anyload.com
© 2025 ANYLOAD V1 dimensions and specifications subject to change without notice

106KS

ANYLOAD

Stainless Steel

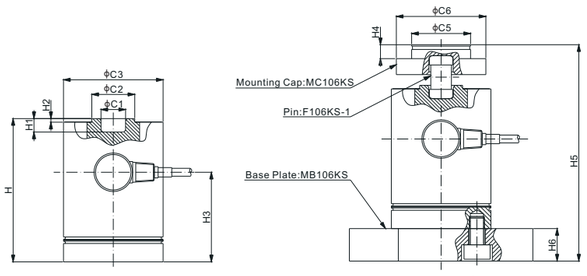

RoHS

Mounting hardware to be ordered separately.

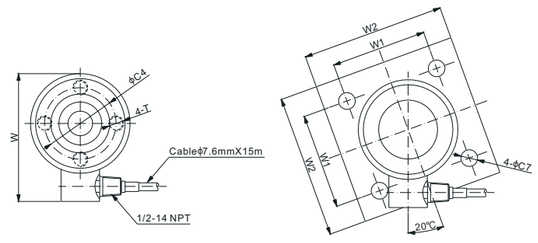

- Material of MC106KS & F106KS-1 is 17-4PH stainless steel;
- Material of MB106KS is 304 stainless steel

DIMENSIONS

RATED CAPACITY	C1	C2	C3	C4	C5	C6	C7	H	H1	H2	H3	H4	H5	H6	W	W1	W2	T
Klb/inches																		
50	1.03	1.80	4.17	3.00	2.47	3.75	0.70	6.00	0.56	0.15	3.75	0.58	9.70	2.00	5.35	4.00	6.00	5/8-18 UNF Depth13
100	1.54	2.28	5.51	4.00	2.70	3.75	0.82	8.12	0.83	0.20	4.84	0.58	12.71	2.00	6.69	6.00	8.00	3/4-16 UNF Depth20
kg/mm (conversion of above dimensions)																		
22,679.6	26.2	45.7	106.0	76.2	62.7	95.3	17.8	152.4	14.3	3.8	95.3	14.8	246.4	50.8	136.0	101.6	152.4	5/8-18 UNF Depth0.5
45,359.2	39.0	57.9	140.0	101.6	68.6	95.3	20.8	206.2	21.0	5.1	123.0	14.8	322.8	50.8	170.0	152.4	203.2	3/4-16 UNF Depth0.8

SPECIFICATIONS

Full Scale Output	2.0 mV/V ± 0.25%	**Recommended Excitation**	10V (15V Maximum)
Zero Balance	± 0.02 mV/V	**Insulation Resistance**	>2 [50V DC] GΩ
Non-linearity	< ± 0.050%	**Compensated Temperature Range**	-10°C to 50°C / 14°F to 122°F
Repeatability	< ± 0.010%	**Safe Overload**	150% of full scale
Hysteresis Error	< ± 0.060%	**Breaking Overload**	300% of full scale
Creep in 30 min.	< ± 0.030%	**Seal Type / IP Rating**	Welded Seal / IP68
Input Resistance	700Ω ± 20	**Cable Color Code**	Exc+ Red Exc- Black Sig+ Green Sig- White Shield Bare
Output Resistance	700Ω ± 5		
Element Material	17-4PH Stainless Steel		

PART NUMBER*

Load Cell

Rated Capacity	Part No.	Weight Approx. (kg)
50Klb	106KS-50Klb	6.3
100Klb	106KS-100Klb	13.4

Mounting Hardware

Mounting Hardware	Load Cell Capacity	Part No.	Weight Approx. (kg)
Mounting Cap	50Klb	MC106KS-50Klb	-
	100Klb	MC106KS-100Klb	1.2
Pin	50Klb	F106KS-1-50Klb	-
	100Klb	F106KS-1-100Klb	0.5
Base Plate	50Klb	MB106KS-50Klb	-
	100Klb	MB106KS-100Klb	15.2

* ATEX, FM, IECEx approved versions carry the "-Ex" suffix.

INTERCHANGEABLE REFERENCE

Brand	Model
Coti Global	CG-CC22
Mettler-Toledo	B10883600A
Mettler-Toledo	B10887700A
Totalcomp	T752

CANISTERS & DISKS

www.anyload.com
© 2025 ANYLOAD V1 dimensions and specifications subject to change without notice

ANYLOAD

106MS-F-YZ

Stainless Steel

Fatfoot®

RoHS

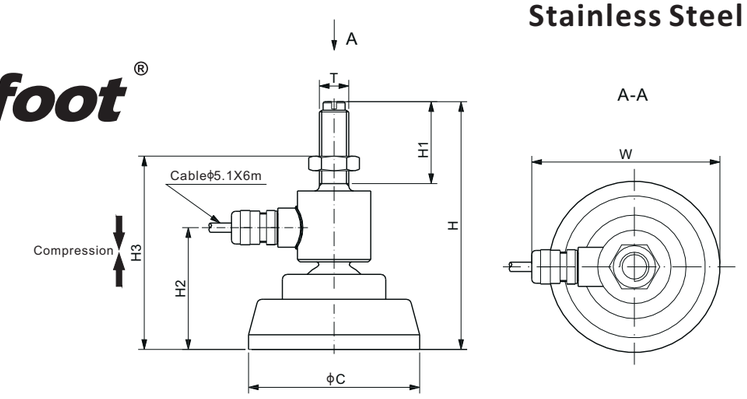

DIMENSIONS

RATED CAPACITY	C	H	H1	H2	H3	W	T
t/mm							
0.5-1	70.0	101.3	33.5	51.8	76.0-99.0	77.0	M12
2	70.0	119.8	50.0	51.8	78.0-116.0	77.0	M16
5	80.0	132.8	55.0	59.8	87.0-127.0	82.0	M20
10	100.0	187.3	80.0	81.3	118.0-180.0	96.0	M24×2
Klb/inches							
1-2.5	2.76	3.99	1.32	1.96	2.99-3.90	3.03	1/2-20 UNF
5-10	3.15	5.23	2.17	2.35	3.43-5.00	3.23	3/4-16 UNF
20	3.94	7.37	3.15	3.20	4.65-7.09	3.78	1-14 UNS

SPECIFICATIONS

Full Scale Output	2.0 mV/V ± 0.25%	**Recommended Excitation**	10V (15V Maximum)
Zero Balance	± 0.04 mV/V	**Insulation Resistance**	>2 [50V DC] GΩ
Non-linearity	Cap.≤2t: < ± 0.050%; Cap.>2t: < ± 0.2%	**Compensated Temperature Range**	-10°C to 50°C / 14°F to 122°F
Repeatability	< ± 0.030%	**Safe Overload**	150% of full scale
Hysteresis Error	< ± 0.050%	**Breaking Overload**	300% of full scale
Creep in 30 min.	< ± 0.030%	**Seal Type / IP Rating**	Welded Seal / IP67
Input Resistance	380Ω ± 20	**Cable Color Code**	Exc+ Red Exc- Black Sig+ Green Sig- White Shield Bare
Output Resistance	350Ω ± 3		
Element Material	2Cr13 Stainless Steel		

PART NUMBER*

Rated Capacity	Part No.	Weight Approx. (kg)
500kg	106MS-F-500kg-YZ	1.0
1t	106MS-F-1t-YZ	1.0
2t	106MS-F-2t-YZ	1.0
5t	106MS-F-5t-YZ	1.5
10t	106MS-F-10t-YZ	2.6
1Klb	106MS-F-1Klb-YZ	1.0
2.5Klb	106MS-F-2.5Klb-YZ	1.0
5Klb	106MS-F-5Klb-YZ	1.0
10Klb	106MS-F-10Klb-YZ	1.5
20Klb	106MS-F-20Klb-YZ	2.6

* ATEX, FM, IECEx approved versions carry the "-Ex" suffix.

WEIGH MODULE

Model	Page
106MHM1	154

CANISTERS & DISKS

www.anyload.com
© 2025 ANYLOAD V1 dimensions and specifications subject to change without notice

106RS

ANYLOAD

Stainless Steel

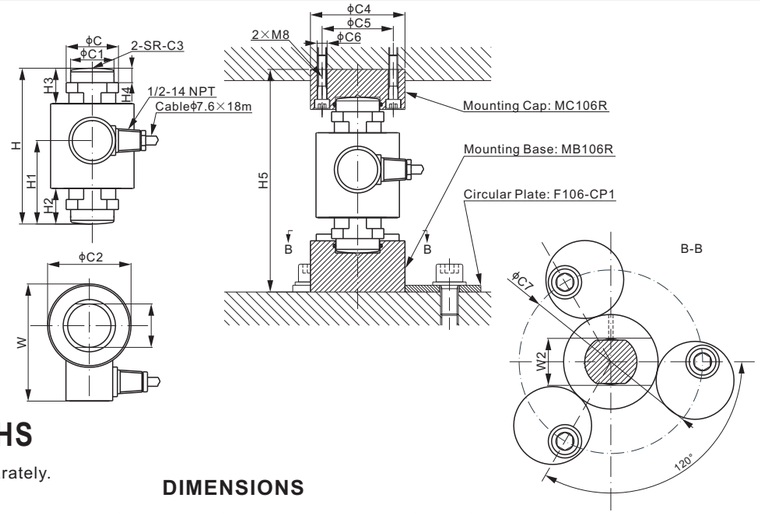

RoHS

Mounting hardware to be ordered separately.

DIMENSIONS

RATED CAPACITY	C	C1	C2	C3	C4	C5	C6	C7	H	H1	H2	H3	H4	H5	W	W1	W2
t/mm																	
30	45.8	39.0	75.0	120.0	85.0	64.0	9.0	165.0	140.0	75.0	32.0	32.0	13.0	200.0	105.3	39.0	42.4
40	45.8	39.0	75.0	180.0	85.0	64.0	9.0	165.0	150.0	80.0	37.0	37.0	13.0	200.0	106.0	39.0	42.4
50	56.5	44.0	99.0	280.0	90.0	70.0	9.0	170.0	178.0	94.0	34.0	34.0	17.0	240.0	129.0	44.0	47.5
100	70.0	62.0	99.0	380.0	120.0	100.0	11.0	200.0	200.0	100.0	34.0	34.0	17.0	282.0	129.0	62.0	66.0
lb/inches (conversion of above dimensions)																	
66,138.7	1.80	1.54	2.99	4.72	3.35	2.52	0.35	6.50	5.51	2.95	1.26	1.26	0.51	7.87	4.15	1.54	1.67
88,184.9	1.80	1.54	2.99	7.09	3.35	2.52	0.35	6.50	5.91	3.15	1.46	1.46	0.51	7.87	4.17	1.54	1.67
110,231.1	2.22	1.73	3.90	11.02	3.55	2.76	0.35	7.70	7.01	3.70	1.34	1.34	0.67	9.46	5.08	1.73	1.87
220,462.3	2.76	2.44	3.90	14.96	4.72	3.94	0.43	7.87	7.87	3.94	1.34	1.34	0.67	11.10	5.08	2.44	2.60

SPECIFICATIONS

Full Scale Output	2.0 mV/V ± 0.1%	**Element Material**	2Cr13 Stainless Steel
Zero Balance	± 0.02 mV/V	**Recommended Excitation**	10V (15V Maximum)
Non-linearity	Cap.≤50t: < ± 0.023%; Cap.=100t: < ± 0.05%	**Insulation Resistance**	>2 [50V DC] GΩ
		Compensated Temperature Range	-10°C to 50°C / 14°F to 122°F
Repeatability	< ± 0.017%	**Safe Overload**	150% of full scale
Hysteresis Error	Cap.≤50t: < ± 0.020%; Cap.=100t: < ± 0.05%	**Breaking Overload**	300% of full scale
		Seal Type / IP Rating	Welded Seal / IP68
Creep in 30 min.	< ± 0.020%	**Cable Color Code**	Exc+ Red Exc- Black Sig+ Green Sig- White Shield Bare
Input Resistance	1150Ω ± 50		
Output Resistance	1000Ω ± 2		

PART NUMBER**

Load Cell

Rated Capacity	Part No.	Weight Approx. (kg)
30t	106RS-30t-YZ	4.2
40t	106RS-40t-YZ	3.9
50t	106RS-50t-YZ	5.2
100t	106RS-100t-YZ	6.2

Mounting Hardware

Alloy Steel	Load Cell Capacity	Part No.	Weight Approx. (kg)
Mounting Cap	(30-40)t	MC106RH-(30-40)t	1.4
	50t	MC106RH-50t	2.0
	100t	MC160RH-100t	4.0
Mounting Base	30t	MB106RH-30t	2.1
	40t	MB106RH-40t	1.6
	50t	MB106RH-50t	2.2
	100t	MB160RH-100t	4.3
Circular Plate*	(30-100)t	F106-CP1-H	1.2

* When ordering mounting hardware, each load cell needs 1 x cap, 1 x base, 3 x circular plates.

* *ATEX, FM, IECEx approved versions carry the "-Ex" suffix.

INTERCHANGEABLE REFERENCE

Brand	Model
Coti Global	CG-26S6
FAIRBANKS	LCF HR4020-2A(30t), part number 70510
FLINTEC	RC3*

*: Not included 100t

NTEP 1:10 000 Class IIIL, Multiple Cell

OIML MAA C3, Y=16 000

For further available P/N's & specifications per NTEP/OIML classes, please contact us.

CANISTERS & DISKS

© 2025 ANYLOAD V1 dimensions and specifications subject to change without notice

ANYLOAD

106RS-FB

Stainless Steel

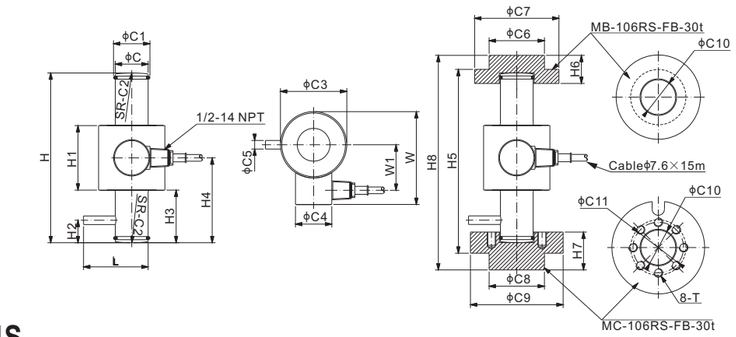

RoHS

DIMENSIONS

RATED CAPACITY	C	C1	C2	C3	C4	C5	C6	C7	C8	C9	C10	C11	H	H1	H2	H3	H4	H5	H6	H7	H8	L	W	W1	T
Klb/inches																									
LE50	1.46	1.57	5.91	2.95	1.61	0.38	2.46	3.75	2.46	4.13	1.57	5.91	7.56	2.87	1.00	2.34	3.78	8.18	1.25	1.69	9.56	2.88	4.13	2.03	M10X1 Depth 15
kN/inches																									
250	1.46	1.57	5.91	2.95	1.61	0.38	2.46	3.75	2.46	4.13	1.57	5.91	7.56	2.87	1.00	2.34	3.78	8.18	1.25	1.69	9.56	2.88	4.13	2.03	M10X1 Depth 15
kg/mm (conversion of above dimensions)																									
LE22,679.6; 25,527.3	37.1	40.0	150.1	75.0	41.0	9.7	62.5	95.3	62.5	104.9	40.0	150.1	192.0	73.0	25.4	59.5	96.0	207.8	31.8	42.9	242.7	73.1	105.0	51.5	M10X1 Depth 15

SPECIFICATIONS

Full Scale Output	1.8 mV/V ± 0.1%	**Recommended Excitation**	10V (15V Maximum)
Zero Balance	± 0.02 mV/V	**Insulation Resistance**	>2 [50V DC] GΩ
Non-linearity	< ± 0.030%	**Compensated Temperature Range**	-10°C to 50°C / 14°F to 122°F
Repeatability	< ± 0.010%	**Safe Overload**	150% of full scale
Hysteresis Error	< ± 0.020%	**Breaking Overload**	300% of full scale
Creep in 30 min.	< ± 0.020%	**Seal Type / IP Rating**	Welded Seal / IP68
Input Resistance	1080Ω ± 10	**Cable Color Code**	Exc+ Red Exc- Black Sig+ Green Sig- White Shield Bare
Output Resistance	1000Ω ± 5		
Element Material	2Cr13 Stainless Steel		

PART NUMBER*

Rated Capacity	Part No.	Weight Approx. (kg)
LE50Klb	106RS-FB-LE50Klb-YZ	3.5
250kN	106RS-FB-250kN-YZ	3.5

* ATEX, FM, IECEx approved versions carry the "-Ex" suffix.

NTEP 1:10 000 Class IIIL, Multiple Cell

OIML MAA C3, Y=16 000

For further available P/N's & specifications per NTEP/OIML classes, please contact us.

INTERCHANGEABLE REFERENCE

Brand	Model
106RS-FB-LE5Klb-YZ	
Coti Global	CG-S1
Fairbanks	LCFHR4020-2, Part# 64166
Rice Lake	RL75114
106RS-FB-250kN-YZ	
Coti Global	CG-S2-56Klb
Fairbanks	LCFHR4020-19
Flintec	RC1

CANISTERS & DISKS

© 2025 ANYLOAD V1 dimensions and specifications subject to change without notice

Stainless Steel

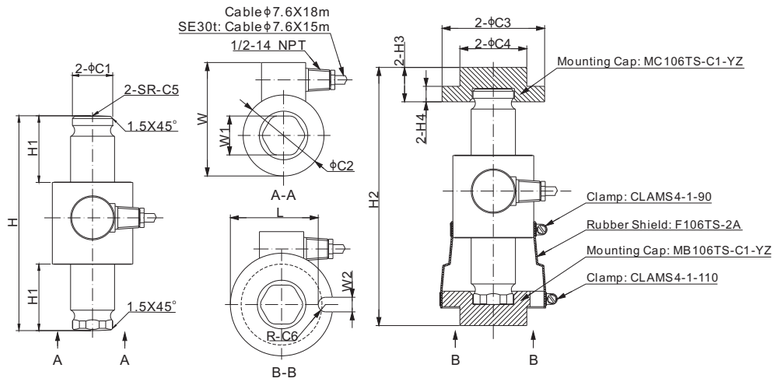

Installation diagram:

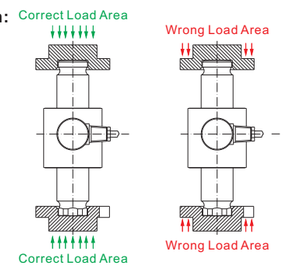

RoHS

Mounting hardware to be ordered separately.

DIMENSIONS

RATED CAPACITY	C1	C2	C3	C4	C5	C6	H	H1	H2	H3	H4	L	W	W1	W2
Klb/inches															
50-100	1.48	2.95	3.74	2.44	11.02	0.27	7.88	2.43	9.41	1.25	0.56	3.21	4.13	1.41	0.53
t/mm															
30	37.7	75.0	95.0	62.0	280.0	6.75	200.0	61.7	239.0	31.8	14.3	81.5	105.0	35.7	13.5
SE30	37.7	75.0	95.0	62.0	160.0	6.75	150.0	37.0	189.0	31.8	14.3	81.5	105.0	35.7	13.5
SE50	37.7	75.0	95.0	62.0	305.0	6.75	150.0	37.0	189.0	31.8	14.3	81.5	105.0	35.7	13.5

SPECIFICATIONS

Full Scale Output	2.0 mV/V ± 0.1%	**Recommended Excitation**	10V (15V Maximum)
Zero Balance	± 0.02 mV/V	**Insulation Resistance**	>2 [50V DC] GΩ
Non-linearity	< ± 0.030%	**Compensated Temperature Range**	-10°C to 50°C / 14°F to 122°F
Repeatability	< ± 0.017%	**Safe Overload**	150% of full scale
Hysteresis Error	< ± 0.017%	**Breaking Overload**	300% of full scale
Creep in 30 min.	< ± 0.020%	**Seal Type / IP Rating**	Welded Seal / IP68
Input Resistance	1150Ω ± 50	**Cable Color Code**	Exc+ Red Exc- Black Sig+ Green Sig- White Shield Bare
Output Resistance	1000Ω ± 5		
Element Material	2Cr13 Stainless Steel		

PART NUMBER*

Load Cell

Rated Capacity	Part No.	Weight Approx. (kg)
50Klb	106TS-50Klb-YZ	4.2
100Klb	106TS-100Klb-YZ	4.4
30t	106TS-30t-YZ	5.8
SE30t	106TS-SE30t-YZ	3.7
SE50t	106TS-SE50t-YZ	3.5

* ATEX, FM, IECEx approved versions carry the "-Ex" suffix.

Mounting Kits*

Load Cell Capacity	Part No.	Weight Approx. (kg)
SE30t, SE50t, 30t, 50Klb, 100Klb	106TS-PARTS-C1	-

*Mounting kits 106TS-PARTS-C1: include
1 mounting cap (MC106TS-C1-YZ), 1 x mounting base (MB106TS-C1-YZ),
1 x rubber shield (F106TS-2A), 2 clamps (1 x CLAMS4-1-90, 1 x CLAMS4-1-110)

Rated Capacity	Part Number	INTERCHANGEABLE REFERENCE	
		Coti-Global	Mettler-Toledo
50Klb	106TS-50Klb-YZ		Powercell 760/MTX*
100Klb	106TS-100Klb-YZ		Powercell 760/MTX*
30t	106TS-30t-YZ	CG-26S7-30t-797	Powercell 760/MTX*
SE30t	106TS-SE30t-YZ	CG-26S7-30t	0782, 30t
SE50t	106TS-SE50t-YZ	CG-26S7-50t	0782, 50t

** Powercell 760 and MTX are digital load cells.*

NTEP 1:10 000 Class IIIL, Multiple Cell

OIML MAA C3, Y=16 000

For further available P/N's & specifications per NTEP/OIML classes, please contact us.

© 2025 ANYLOAD V1 dimensions and specifications subject to change without notice

For applications that need to replace Mettler Toledo Powercell PDX (SLC820) 30t or 50t, you have options too: Order mounting variation A or B with 106TS-SE30t-YZ or 106TS-SE50t-YZ.

Mounting variation A:

Mounting Cap: MC106TS-A1-YZ

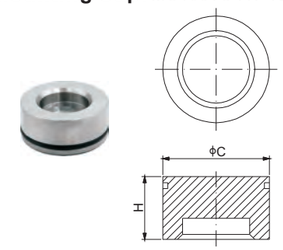

Mounting Base: MB106TS-A1-YZ

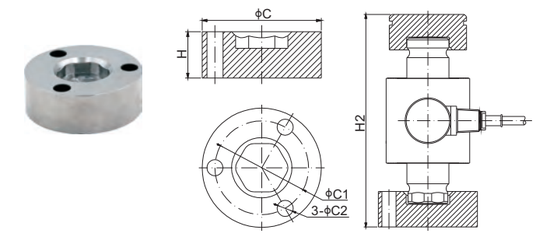

Rubber shield:
F106TS-2B

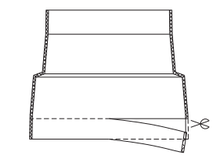

1/2 inch shorter than F106TS-2A

DIMENSIONS

PART NUMBER	RATED CAPACITY	C	C1	C2	H	H1	H2	L	W
	t/mm								
MC106TS-A1-YZ	30	69.3	–	–	31.8	–	190.6	–	–
MB106TS-A1-YZ	30	88.9	69.9	12.7	31.8	–	190.6	–	–
	Klb/inches(conversion of above dimensions)								
MC106TS-A1-YZ	66.14	2.73	–	–	1.25	–	7.5	–	–
MB106TS-A1-YZ	66.14	3.50	2.75	0.50	1.25	–	7.5	–	–

Mounting kits:
106TS-PARTS-A1:
Include 1 x mounting cap (MC106TS-A1-YZ), 1 x mounting base (MB106TS-A1-YZ), 1 x rubber shield (F106TS-2B), 2 x clamps (1 x CLAMS4-1-90, 1 x CLAMS4-1-110)

Mounting variation B:

Mounting Cap: MC106TS-B1-YZ

Mounting Base: MB106TS-B1-YZ

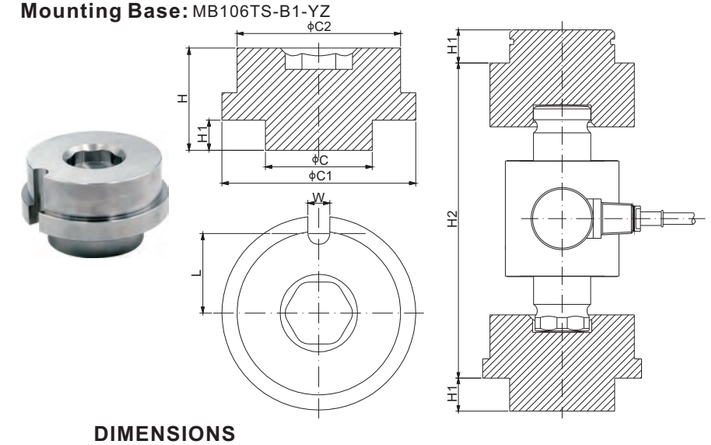

DIMENSIONS

PART NUMBER	RATED CAPACITY	C	C1	C2	H	H1	H2	L	W
	t/mm								
MC106TS-B1-YZ	30	69.3	95.3	–	63.5	21.8	207.9	–	–
MB106TS-B1-YZ	30	69.3	104.9	95.3	63.5	21.8	207.9	46.2	12.7
	Klb/inches(conversion of above dimensions)								
MC106TS-B1-YZ	66.14	2.73	3.75	–	2.50	0.86	8.19	–	–
MB106TS-B1-YZ	66.14	2.73	4.13	3.75	2.50	0.86	8.19	1.82	0.50

Mounting kits:
106TS-PARTS-B1:
Include 1 x mounting cap (MC106TS-B1-YZ), 1 x mounting base (MB106TS-B1-YZ), 1 x rubber shield (F106TS-2B), 2 x clamps (1 x CLAMS4-1-90, 1 x CLAMS4-1-110)

© 2025 ANYLOAD V1 dimensions and specifications subject to change without notice

106PS; 106PS20

ANYLOAD

Stainless Steel

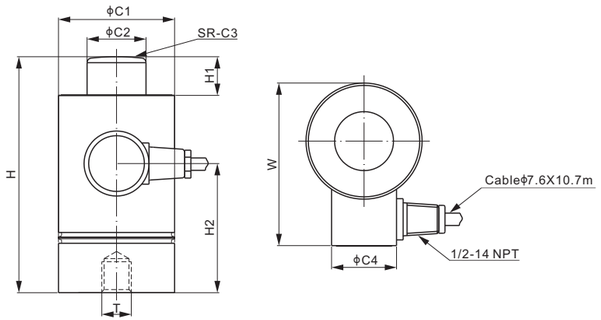

CE Ex ATEX FM APPROVED IECEx RoHS

DIMENSIONS

RATED CAPACITY	C1	C2	C3	C4	H	H1	H2	W	T
KIb/inches									
50	2.95	1.50	6.00	1.65	6.00	0.98	3.28	4.13	3/4-16 UNF Depth0.59
100	3.94	1.75	12.00	1.65	8.50	1.10	4.76	5.12	3/4-16 UNF Depth0.59
kg/mm (conversion of above dimensions)									
22,679.6	75	38.1	152.4	42	152.4	25	83.4	105	3/4-16 UNF Depth15
45,359.2	100	44.5	304.8	42	215.9	28	121	130	3/4-16 UNF Depth15

SPECIFICATIONS

Full Scale Output	106PS: 3.0 mV/V ± 0.1% 106PS20: 2.0 mV/V ± 0.1%	**Recommended Excitation**	10V (15V Maximum)
		Insulation Resistance	>2 [50V DC] GΩ
Zero Balance	± 0.02 mV/V	**Compensated Temperature Range**	-10°C to 50°C / 14°F to 122°F
Non-linearity	< ± 0.030%	**Safe Overload**	150% of full scale
Repeatability	< ± 0.017%	**Breaking Overload**	300% of full scale
Hysteresis Error	< ± 0.017%	**Seal Type / IP Rating**	Welded Seal / IP68
Creep in 30 min.	< ± 0.030%	**Cable Color Code**	Exc+ Red Exc- Black Sig+ Green Sig- White Shield Bare
Input Resistance	350Ω ± 3.5		
Output Resistance	350Ω ± 3.5		
Element Material	2Cr13 Stainless Steel		

PART NUMBER*

Rated Capacity	Part No.	Weight Approx. (kg)
50KIb	106PS-50KIb-YZ	3.8
	106PS20-50KIb-YZ	3.8
100KIb	106PS-100KIb-YZ	7.1
	106PS20-100KIb-YZ	7.1

* ATEX, FM, IECEx approved versions carry the "-Ex" suffix.

INTERCHANGEABLE REFERENCE

Brand	Model
106PS	
Coti Global	CG-93
Vishay Revere Transducers	93
106PS20	
Coti Global	CG-92
Vishay Revere Transducers	92

CANISTERS & DISKS

www.anyload.com
© 2025 ANYLOAD V1 dimensions and specifications subject to change without notice

ANYLOAD

266AA; 266AH

Aluminum / Alloy Steel; Patent Design

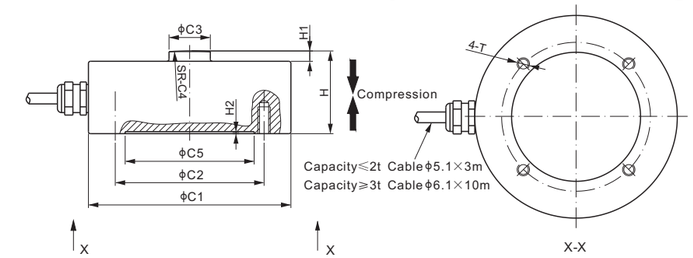

CE Ex ATEX FM APPROVED IECEx RoHS

Mounting hardware to be ordered separately.

DIMENSIONS

RATED CAPACITY	C1	C2	C3	C4	C5	H	H1	H2	T
266AA									
kg/mm									
25-50	62.0	55.0	12.0	50.0	36.0	22.0	4.0	1.0	M5 Depth7.0
lb/inches (conversion of above dimensions)									
55.12-110.23	2.44	2.17	0.47	1.97	1.42	0.87	0.16	0.04	M5 Depth0.28
266AH									
kg/mm									
100-2,000	62.0	55.0	12.0	50.0	36.0	22.0	4.0	1.0	M5 Depth7.0
3,000-5,000	98.0	72.0	20.0	150.0	62.4	40.0	5.0	1.0	M6 Depth13.0
10,000	98.0	72.0	20.0	150.0	62.4	45.0	5.0	1.0	M6 Depth13.0
20,000	118.0	90.0	20.0	250.0	62.4	50.0	5.0	1.0	M8 Depth15.0
30,000	138.0	115.0	20.0	250.0	62.4	73.0	8.0	1.0	M10 Depth15.0
lb/inches (conversion of above dimensions)									
220.5-4,409.2	2.44	2.17	0.47	1.97	1.42	0.87	0.16	0.04	M5 Depth0.28
6,613.9-11,023.1	3.86	2.83	0.79	5.91	2.46	1.57	0.20	0.04	M6 Depth 0.51
22,046.2	3.86	2.83	0.79	5.91	2.46	1.77	0.20	0.04	M6 Depth0.51
44,092.5	4.65	3.54	0.79	9.84	2.46	1.97	0.20	0.04	M8 Depth0.59
66,138.7	5.43	4.53	0.79	9.84	2.46	2.87	0.31	0.04	M10 Depth0.59

SPECIFICATIONS

Full Scale Output	2.0 mV/V ± 1%	**Recommended Excitation**	10V (15V Maximum)
Zero Balance	< ± 0.04 mV/V	**Insulation Resistance**	>2 [50V DC] GΩ
Non-linearity	Cap.≤2t: < ± 0.2%; Cap.≥3t: < ± 0.05%	**Compensated Temperature Range**	-10°C to 50°C / 14°F to 122°F
Repeatability	Cap.≤2t: < ± 0.03%; Cap.≥3t: < ± 0.03%	**Safe Overload**	150% of full scale
Hysteresis Error	Cap.≤2t: < ± 0.1%; Cap.≥3t: < ± 0.05%	**Breaking Overload**	300% of full scale
Creep in 30 min.	Cap.≤2t: < ± 0.1%; Cap.≥3t: < ± 0.05%	**Seal Type / IP Rating**	266AA: Environmentally Sealed / IP66
Input Resistance	Cap.≤2t: 400Ω ± 20; Cap.≥3t: 770Ω ± 30		266AH: Welded Seal / IP67
Output Resistance	Cap.≤2t: 350Ω ± 3; Cap.≥3t: 700Ω ± 5	**Cable Color Code**	Exc+ Red Exc- Black Sig+ Green Sig- White Shield Bare
Element Material	Aluminum, Clear Anodized Alloy Steel, Nickel Plated		

PART NUMBER*

Rated Capacity	Part No.	Weight Approx. (kg)
25kg	266AA-25kg	0.3
50kg	266AA-50kg	0.3
100kg	266AH-100kg	0.5
200kg	266AH-200kg	0.5
300kg	266AH-300kg	0.5
500kg	266AH-500kg	0.5
1t	266AH-1t	0.5
2t	266AH-2t	0.5
3t	266AH-3t	2.4
5t	266AH-5t	2.4
10t	266AH-10t	2.4
20t	266AH-20t	4.2
30t	266AH-30t	8.3

* ATEX, FM, IECEx approved versions carry the "-Ex" suffix.

CANISTERS & DISKS

www.anyload.com
© 2025 ANYLOAD V1 dimensions and specifications subject to change without notice

Mounting Variation 1, Alloy Steel
F266-1

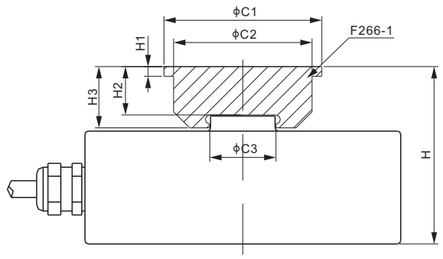

DIMENSIONS

PART NUMBER	LOAD CELL CAPACITY	C1	C2	C3	H	H1	H2	H3	Weight Approx. (kg)
	kg/mm								
F266-1B	25-2,000	41.0	35.0	13.8	35.1	3.0	13.1	16.0	0.12
F266-1C	3,000-5,000	49.0	43.0	20.5	55.1	3.0	15.1	19.0	0.20
F266-1C	10,000	49.0	43.0	20.5	60.1	3.0	15.1	19.0	0.20
F266-1D	20,000	60.0	54.0	21.0	70.1	3.0	20.1	24.0	0.41
F266-1D	30,000	60.0	54.0	20.5	93.1	3.0	20.1	24.0	0.41
	lb/inches (conversion of above dimensions)								
F266-1B	55.1-4,409.2	1.61	1.38	0.54	1.38	0.12	0.52	0.63	0.12
F266-1C	6,613.9-11,023.1	1.93	1.69	0.81	2.17	0.12	0.59	0.75	0.20
F266-1C	22,046.2	1.93	1.69	0.81	2.37	0.12	0.59	0.75	0.20
F266-1D	44,092.5	2.36	2.13	0.83	2.76	0.12	0.79	0.95	0.41
F266-1D	66,138.7	2.36	2.13	0.81	3.67	0.12	0.79	0.95	0.41

Mounting Variation 2
F266-1 + F266-2 + ZPS

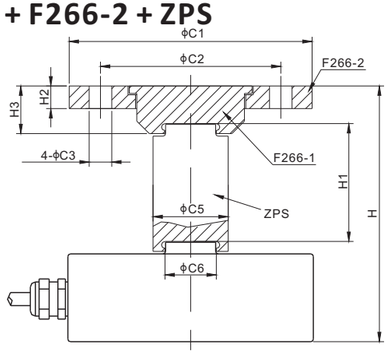

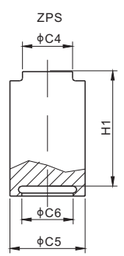

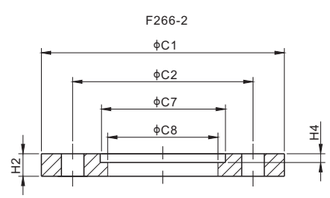

DIMENSIONS

LOAD CELL CAPACITY	C1	C2	C3	C4	C5	C6	C7	C8	H	H1	H2	H3	H4
kg/mm													
25-2,000	81.0	60.0	9.0	13.0	26.0	12.5	42.0	36.0	81.1	46.0	7.0	16.0	3.5
3,000-5,000	97.0	72.0	11.0	20.0	32.0	20.5	50.0	44.0	111.1	56.0	9.0	19.0	3.5
10,000	97.0	72.0	11.0	20.0	32.0	20.5	50.0	44.0	116.1	56.0	9.0	19.0	3.5
20,000	115.0	90.0	13.0	20.0	36.0	20.5	61.0	55.0	134.6	64.5	10.0	24.0	3.5
30,000	115.0	90.0	13.0	20.0	36.0	20.5	61.0	55.0	157.6	64.5	10.0	24.0	3.5
lb/inches (conversion of above dimensions)													
55.1-4,409.2	3.19	2.36	0.35	0.51	1.02	0.49	1.65	1.42	3.19	1.81	0.28	0.63	0.14
6,613.9-11,023.1	3.82	2.83	0.43	0.79	1.26	0.81	1.97	1.73	4.37	2.20	0.35	0.75	0.14
22,046.2	3.82	2.83	0.43	0.79	1.26	0.81	1.97	1.73	4.57	2.20	0.35	0.75	0.14
44,092.5	4.53	3.54	0.51	0.79	1.42	0.81	2.40	2.17	5.30	2.54	0.39	0.95	0.14
66,138.7	4.53	3.54	0.51	0.79	1.42	0.81	2.40	2.17	6.21	2.54	0.39	0.95	0.14

PART NUMBER

Load Cell Capacity	F266-1 Part No.	F266-2 Part No.	ZPS Part No.
25kg-2t	F266-1B	F266-2B	ZPS-B
3t; 5t; 10t	F266-1C	F266-2C	ZPS-C
20t; 30t	F266-1D	F266-2D	ZPS-D

www.anyload.com
© 2025 ANYLOAD V1 dimensions and specifications subject to change without notice

Mounting Variation 3
F266-1 + F266-2 + FEB

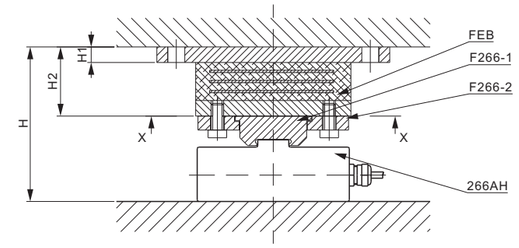

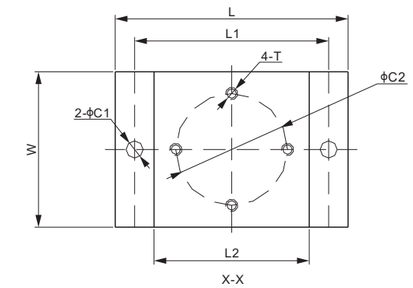

DIMENSIONS

LOAD CELL CAPACITY	C1	C2	H	H1	H2	L	L1	L2	W	T
kg/mm										
25-2,000	9.0	60.0	81.1	8.0	46.0	150.0	125.0	100.0	90.0	M8
3,000-5,000	11.0	72.0	99.6	10.0	44.5	180.0	150.0	120.0	120.0	M10
10,000	11.0	72.0	104.6	10.0	44.5	180.0	150.0	120.0	120.0	M10
20,000	13.0	90.0	120.1	12.0	50.0	270.0	240.0	200.0	200.0	M12
30,000	13.0	90.0	143.1	12.0	50.0	270.0	240.0	200.0	200.0	M12
lb/inches (conversion of above dimensions)										
55.1-4,409.2	0.35	2.36	3.19	0.31	1.81	5.91	4.93	3.94	3.55	M8
6,613.9-11,023.1	0.43	2.84	3.92	0.39	1.75	7.09	5.91	4.73	4.73	M10
22,046.2	0.43	2.84	4.12	0.39	1.75	7.09	5.91	4.73	4.73	M10
44,092.5	0.51	3.55	4.73	0.47	1.97	10.64	9.46	7.88	7.88	M12
66,138.7	0.51	3.55	5.64							

PART NUMBER

Load Cell Capacity	F266-1* Part No.	F266-2* Part No.
25kg-2t	F266-1B	F266-2B
3t; 5t; 10t	F266-1C	F266-2C
20t; 30t	F266-1D	F266-2D

** Neither F266-1 nor F266-2 includes the bolts, the bolts need to be ordered separately. FEB includes 4 bolts that match the hole size (T on the drawing).*

PART NUMBER

Load Cell Capacity	FEB * Part No.	Weight (kg) Approx.
25kg-2t	FEB-B	2.3
3t; 5t; 10t	FEB-C	-
20t; 30t	FEB-D	-

www.anyload.com
© 2025 ANYLOAD V1 dimensions and specifications subject to change without notice

266AS

ANYLOAD

Stainless Steel; Patent Design

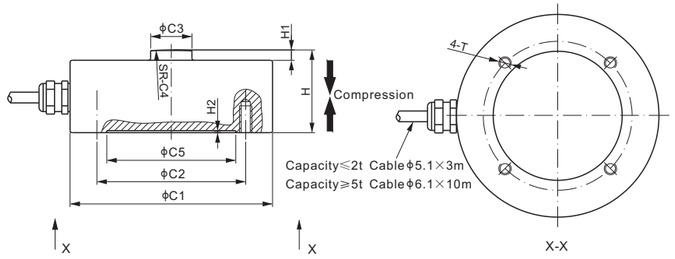

CE Ex ATEX FM APPROVED IECEx RoHS

DIMENSIONS

RATED CAPACITY	C1	C2	C3	C4	C5	H	H1	H2	T
kg/mm									
100–2,000	62.0	55.0	12.0	50.0	36.0	22.0	4.0	1.0	M5 Depth7.0
5,000	98.0	72.0	20.0	150.0	62.4	40.0	5.0	1.0	M6 Depth13.0
10,000	98.0	72.0	20.0	150.0	62.4	45.0	5.0	1.0	M6 Depth13.0
20,000	118.0	90.0	25.0	250.0	62.4	52.0	7.0	1.0	M8 Depth15.0
30,000	138.0	115.0	25.0	250.0	62.4	73.0	8.0	1.0	M10 Depth15.0
lb/inches (conversion of above dimensions)									
220.5–4,409.2	2.44	2.17	0.47	1.97	1.42	0.87	0.16	0.04	M5 Depth0.28
11,023.1	3.86	2.83	0.79	5.91	2.46	1.57	0.20	0.04	M6 Depth 0.51
22,046.2	3.86	2.83	0.79	5.91	2.46	1.77	0.20	0.04	M6 Depth0.51
44,092.5	4.65	3.54	0.98	9.84	2.46	2.05	0.28	0.04	M8 Depth0.59
66,138.7	5.43	4.53	0.98	9.84	2.46	2.87	0.31	0.04	M10 Depth0.59

SPECIFICATIONS

Full Scale Output	2.0 mV/V ± 1%	**Recommended Excitation**	10V (15V Maximum)
Zero Balance	< ± 0.04 mV/V	**Insulation Resistance**	>2 [50V DC] GΩ
Non-linearity	Cap.≤2t: < ± 0.2%; Cap.≥5t: < ± 0.05%	**Compensated Temperature Range**	-10°C to 50°C / 14°F to 122°F
Repeatability	Cap.≤2t: < ± 0.03%; Cap.≥5t: < ± 0.03%	**Safe Overload**	150% of full scale
Hysteresis Error	Cap.≤2t: < ± 0.1%; Cap.≥5t: < ± 0.05%	**Breaking Overload**	300% of full scale
Creep in 30 min.	Cap.≤2t: < ± 0.1%; Cap.≥5t: < ± 0.05%	**Seal Type / IP Rating**	Welded Seal / IP68
Input Resistance	Cap.≤2t: 400Ω ± 20; Cap.≥5t: 770Ω ± 30	**Cable Color Code**	Exc+ Red Exc- Black
Output Resistance	Cap.≤2t: 350Ω ± 3; Cap.≥5t: 700Ω ± 5		Sig+ Green Sig- White
Element Material	17-4PH Stainless Steel		Shield Bare

PART NUMBER*

Rated Capacity	Part No.	Weight Approx. (kg)
100kg	266AS-100kg	0.5
200kg	266AS-200kg	0.5
250kg	266AS-250kg	0.5
500kg	266AS-500kg	0.5
1t	266AS-1t	0.5
2t	266AS-2t	0.5
5t	266AS-5t	2.4
10t	266AS-10t	2.7
20t	266AS-20t	4.2
30t	266AS-30t	8.3

* ATEX, FM, IECEx approved versions carry the "-Ex" suffix.

www.anyload.com
© 2025 ANYLOAD V1 dimensions and specifications subject to change without notice

ANYLOAD

266ASPT

Stainless Steel

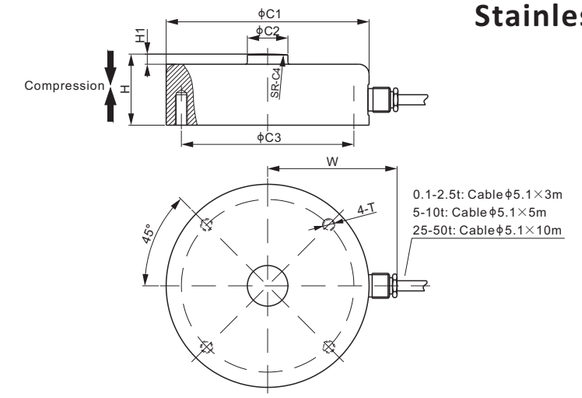

CE Ex ATEX FM APPROVED IECEx RoHS

DIMENSIONS

RATED CAPACITY	C1	C2	C3	C4	H	H1	W	T
t/mm								
0.1–1	52.0	10.0	44.0	30.0	22.0	4.0	41.0	M5 Depth12
2.5	52.0	10.0	44.0	30.0	25.0	4.0	41.0	M5 Depth12
5	100.0	20.0	85.0	120.0	30.0	5.0	65.0	M6 Depth15
10	100.0	20.0	85.0	120.0	35.0	5.0	65.0	M6 Depth15
25	115.0	32.0	90.0	150.0	50.0	10.0	75.0	M12 Depth25
50	155.0	45.0	130.0	180.0	55.0	12.0	95.0	M12 Depth25
Klb/inches (conversion of above dimensions)								
0.22–2.2	2.05	0.39	1.73	1.18	0.87	0.16	1.61	M5 Depth0.47
5.5	2.05	0.39	1.73	1.18	0.98	0.16	1.61	M5 Depth0.47
11	3.94	0.79	3.35	4.72	1.18	0.20	2.56	M6 Depth0.59
22	3.94	0.79	3.35	4.72	1.38	0.20	2.56	M6 Depth0.59
55	4.53	1.26	3.54	5.91	1.97	0.39	2.95	M12 Depth0.98
110	6.10	1.77	5.12	7.09	2.17	0.47	3.74	M12 Depth0.98

SPECIFICATIONS

Full Scale Output	2.0 mV/V ± 1%	**Recommended Excitation**	10V (15V Maximum)
Zero Balance	± 0.04 mV/V	**Insulation Resistance**	>2 [50V DC] GΩ
Non-linearity	< ± 0.050%	**Compensated Temperature Range**	-10°C to 50°C / 14°F to 122°F
Repeatability	< ± 0.030%	**Safe Overload**	150% of full scale
Hysteresis Error	< ± 0.070%	**Breaking Overload**	300% of full scale
Creep in 30 min.	< ± 0.050%	**Seal Type / IP Rating**	Welded Seal / IP68
Input Resistance	415Ω ± 15	**Cable Color Code**	Exc+ Red Exc- Black
Output Resistance	350Ω ± 3		Sig+ Green Sig- White
Element Material	2Cr13 Stainless Steel		Shield Bare

PART NUMBER*

Rated Capacity	Part No.	Weight Approx. (kg)
100kg	266ASPT-100kg-YZ	-
250kg	266ASPT-250kg-YZ	-
500kg	266ASPT-500kg-YZ	-
1t	266ASPT-1t-YZ	-
2.5t	266ASPT-2.5t-YZ	-
5t	266ASPT-5t-YZ	1.7
10t	266ASPT-10t-YZ	1.9
25t	266ASPT-25t-YZ	-
50t	266ASPT-50t-YZ	-

* ATEX, FM, IECEx approved versions carry the "-Ex" suffix.

INTERCHANGEABLE REFERENCE

Brand	Model
PT Global	LPX

www.anyload.com
© 2025 ANYLOAD V1 dimensions and specifications subject to change without notice

276EH

ANYLOAD

Alloy Steel, Patent Design, Mounting Hardware For 276EH Load Cell F266-1

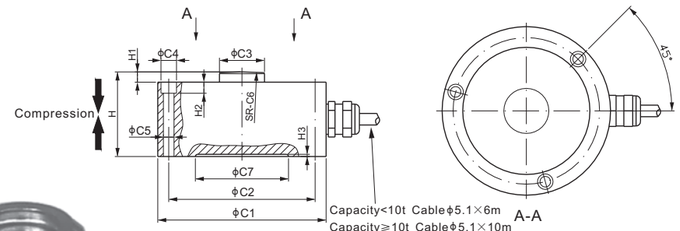

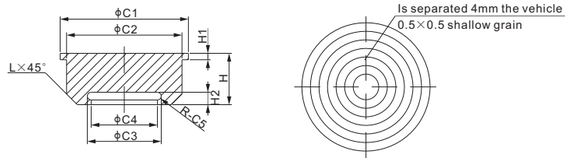

RoHS

Mounting hardware included.

DIMENSIONS

RATED CAPACITY	C1	C2	C3	C4	C5	C6	C7	H	H1	H2	H3
t/mm											
5	60.0	52.0	9.5	6.0	3.2	30.0	42.0	24.0	4.0	3.0	0.8
10	63.6	55.0	13.5	7.2	4.2	100.0	44.0	26.0	4.0	5.0	0.8
25	75.9	66.0	20.3	7.0	4.8	150.0	54.0	38.1	4.6	5.0	1.0
50	105.0	90.0	30.0	11.0	6.5	250.0	76.0	53.0	7.0	7.0	1.0
100	123.0	98.0	43.0	15.0	10.5	380.0	74.0	95.0	15.0	12.0	1.0
lb/inches (conversion of above dimensions)											
11,023.1	2.36	2.05	0.37	0.24	0.13	1.18	1.65	0.94	0.16	0.11	0.03
22,046.2	2.50	2.17	0.53	0.28	0.17	3.94	1.73	1.02	0.16	0.20	0.03
55,115.6	2.99	2.60	0.80	0.28	0.19	5.91	2.13	1.50	0.18	0.20	0.04
110,231.1	4.13	3.54	1.18	0.43	0.28	9.84	2.99	2.09	0.28	0.28	0.04
220,462.3	4.84	3.86	1.69	0.59	0.41	14.96	2.92	3.74	0.59	0.47	0.04

PART NUMBER	LOAD CELL CAPACITY	C1	C2	C3	C4	C5	H	H1	H2	L	Weight Approx. (kg)
	t/mm										
F266-1A	5	33.0	27.0	12.0	10.0	1.0	13.0	3.0	2.9	3.0	0.06
F266-1B	10	41.0	35.0	16.0	14.0	1.0	16.0	3.0	2.9	4.0	0.12
F266-1C	25	49.0	43.0	23.8	21.0	1.4	19.0	3.0	3.9	5.0	0.20
F266-1E	50	72.0	66.0	34.6	31.0	1.8	36.0	3.0	5.7	5.0	–
F266-1F	100	80.0	74.0	55.0	45.0	5.0	50.0	3.0	12.4	7.0	–
	lb/inches (conversion of above dimensions)										
F266-1A	11,023.1	1.30	1.06	0.47	0.39	0.04	0.51	0.12	0.11	0.12	0.06
F266-1B	22,046.2	1.61	1.38	0.63	0.55	0.04	0.63	0.12	0.11	0.16	0.12
F266-1C	55,115.6	1.93	1.69	0.94	0.83	0.06	0.75	0.12	0.15	0.20	0.20
F266-1E	110,231.1	2.83	2.60	1.36	1.22	0.07	1.42	0.12	0.22	0.20	–
F266-1F	220,462.3	3.15	2.91	2.17	1.77	0.20	1.97	0.12	0.49	0.28	–

SPECIFICATIONS

Full Scale Output	2.5 mV/V ± 10%	**Recommended Excitation**	10V (15V Maximum)
Zero Balance	± 0.02 mV/V	**Insulation Resistance**	>2 [50V DC] GΩ
Non-linearity	Cap.≤50t: < ± 0.32%; Cap.≥100t: < ± 1%	**Compensated Temperature Range**	-10°C to 50°C / 14°F to 122°F
Repeatability	Cap.≤50t: < ± 0.050%; Cap.≥100t: < ± 0.2%	**Safe Overload**	150% of full scale
Hysteresis Error	Cap.≤50t: < ± 0.32%; Cap.≥100t: < ± 2%	**Breaking Overload**	300% of full scale
Creep in 30 min.	Cap.≤50t: < ± 0.10%; Cap.≥100t: < ± 0.1%	**Seal Type / IP Rating**	Environmentally Sealed / IP67
Input Resistance	400Ω ± 20	**Cable Color Code**	Exc+ Red Exc- Black
Output Resistance	350Ω ± 3		Sig+ Green Sig- White
Element Material	Alloy Steel, Nickel Plated		Shield Bare

PART NUMBER*

Rated Capacity	Part No.	Weight Approx. (kg)
5t	276EH-5t	0.6
10t	276EH-10t	0.9
25t	276EH-25t	1.8
50t	276EH-50t	4.2
100t	276EH-100t	8.7

WEIGH MODULE

Model	Page
276EHM1	156

* ATEX, FM, IECEx approved versions carry the "-Ex" suffix.

CANISTERS & DISKS

www.anyload.com
© 2025 ANYLOAD V1 dimensions and specifications subject to change without notice

ANYLOAD

363HHAN

Alloy Steel

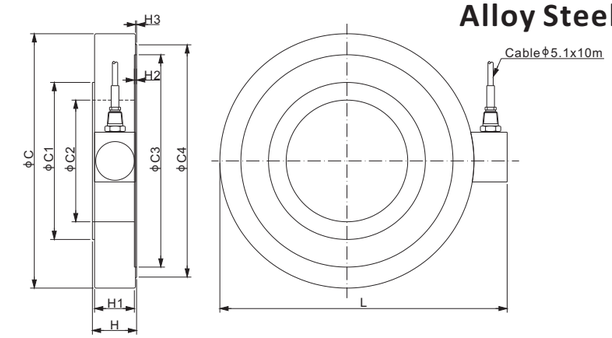

RoHS

DIMENSIONS

RATED CAPACITY	C	C1	C2	C3	C4	H	H1	H2	H3	L
t/mm										
60	230	142	110	192	210	40.0	38.0	2.0	1.0	260
Klb/inches (conversion of above dimensions)										
132.28	9.06	5.59	4.33	7.56	8.27	1.58	1.50	0.08	0.04	10.24

SPECIFICATIONS

Full Scale Output	2.0 mV/V ± 0.25%	**Recommended Excitation**	10V (15V Maximum)
Zero Balance	± 0.02 mV/V	**Insulation Resistance**	>2 [50V DC] GΩ
Non-linearity	< ± 0.8%	**Compensated Temperature Range**	-10°C to 50°C / 14°F to 122°F
Repeatability	< ± 0.03%	**Safe Overload**	150% of full scale
Hysteresis Error	< ± 0.9%	**Breaking Overload**	300% of full scale
Creep in 30 min.	< ± 0.1%	**Seal Type / IP Rating**	Welded Seal / IP67
Input Resistance	770Ω ± 30	**Cable Color Code**	Exc+ Red Exc- Black
Output Resistance	700Ω ± 5		Sig+ Green Sig- White
Element Material	Alloy Steel		Shield Bare

PART NUMBER*

Rated Capacity	Part No.	Weight Approx. (kg)
60t	363HHAN-60t-10m	9.6

* ATEX, FM, IECEx approved versions carry the "-Ex" suffix.

AVAILABLE OPTION

■ Stainless steel element: 363HSAN

APPLICATION EXAMPLES

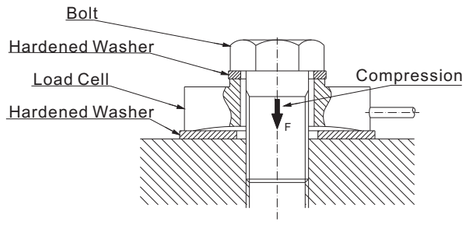

CANISTERS & DISKS

www.anyload.com
© 2025 ANYLOAD V1 dimensions and specifications subject to change without notice

Alloy Steel

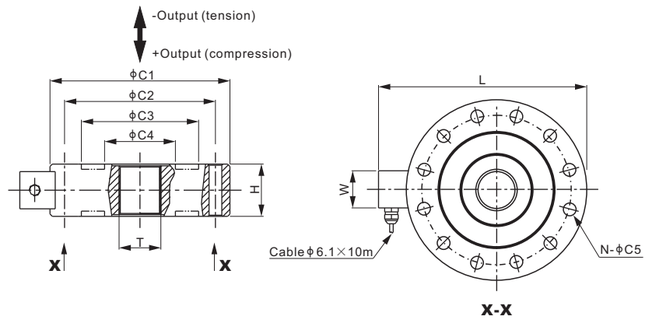

RoHS

Mounting hardware to be ordered separately.

DIMENSIONS

RATED CAPACITY	C1	C2	C3	C4	C5	N	H	L	W	T
t/mm										
1–5	113.0	97.0	81.0	37.0	7	8	35.0	145.4	32.0	M24X2
10; 20	155.0	130.0	106.0	56.0	11	12	45.0	189.0	32.0	M36X2
30	180.0	150.0	125.0	75.0	13	12	58.0	212.6	32.0	M42X2
50	205.0	165.0	125.0	75.0	13	16	64.0	237.9	32.0	M42X2
100	280.0	228.0	182.0	118.0	17	16	90.0	322.7	48.0	M70X3
150; 200	296.0	256.0	223.0	133.0	22	16	120.0	338.7	48.0	M90X3
300	346.0	282.0	242.0	174.0	26	16	180.0	388.6	48.0	M120X3
lb/inches (conversion of above dimensions)										
2,204.6–11,023.1	4.45	3.82	3.19	1.46	0.28	8	1.38	5.72	1.26	M24X2
22,046.2; 44,092.5	6.10	5.12	4.17	2.20	0.43	12	1.77	7.44	1.26	M36X2
66,138.7	7.09	5.91	4.92	2.95	0.51	12	2.28	8.37	1.26	M42X2
110,231.1	8.07	6.50	4.92	2.95	0.51	16	2.52	9.37	1.26	M42X2
220,462.3	11.02	8.98	7.17	4.65	0.67	16	3.54	12.70	1.89	M70X3
330,693.4; 440,924.5	11.65	10.08	8.78	5.24	0.87	16	4.72	13.33	1.89	M90X3
661,386.8	13.62	11.10	9.53	6.85	1.02	16	7.09	15.30	1.89	M120X3

SPECIFICATIONS

Full Scale Output	2.0 mV/V ± 1%	**Recommended Excitation**	10V (15V Maximum)
Zero Balance	< ± 0.02 mV/V	**Insulation Resistance**	>2 [50V DC] GΩ
Non-linearity	Cap.≤5t: < ± 0.050%; Cap.≥10t: < ± 0.30%	**Compensated Temperature Range**	-10°C to 50°C / 14°F to 122°F
Repeatability	Cap.≤5t: < ± 0.030%; Cap.≥10t: < ± 0.20%	**Safe Overload**	150% of full scale
Hysteresis Error	Cap.≤5t: < ± 0.050%; Cap.≥10t: < ± 0.30%	**Breaking Overload**	300% of full scale
Creep in 30 min.	Cap.≤5t: < ± 0.050%; Cap.≥10t: < ± 0.10%	**Seal Type / IP Rating**	Welded Seal / IP67
Input Resistance	770Ω ± 30	**Cable Color Code**	Exc+ Red Exc- Black Sig+ Green Sig- White Shield Bare
Output Resistance	700Ω ± 5		
Element Material	Alloy Steel, Nickel Plated		

PART NUMBER*

Rated Capacity	Part No.	Weight Approx. (kg)
1t	363YH-1t	2.8
2t	363YH-2t	2.8
3t	363YH-3t	2.8
5t	363YH-5t	2.8
10t	363YH-10t	5.5
20t	363YH-20t	5.5
30t	363YH-30t	12.4
50t	363YH-50t	16.8
100t	363YH-100t	40.6
150t	363YH-150t	51.0
200t	363YH-200t	51.0
300t	363YH-300t	97.2

* ATEX, FM, IECEx approved versions carry the "-Ex" suffix.

© 2025 ANYLOAD V1 dimensions and specifications subject to change without notice

Mounting Variation 1, Alloy Steel MH363YH

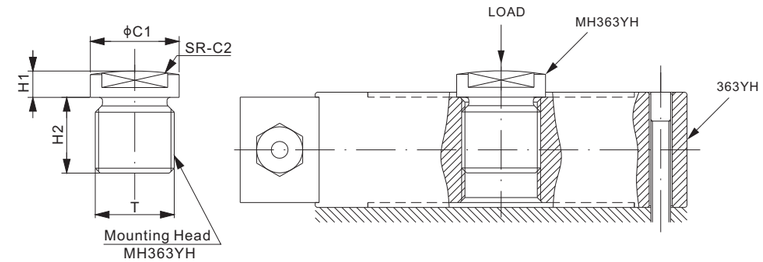

DIMENSIONS

PART NUMBER	LOAD CELL CAPACITY	C1	C2	H1	H2	T	Weight Approx. (kg)
	t/mm						
MH363YH–(1–5)t	1–5	27.0	85.0	8.0	25.0	M24X2	–
MH363YH–(10–20)t	10; 20	45.0	150.0	22.0	38.0	M36X2	–
MH363YH–30t	30	54.0	180.0	32.0	48.0	M42X2	0.97
MH363YH–50t	50	64.0	200.0	42.0	54.0	M42X2	–
MH363YH–100t	100	102.0	300.0	48.0	79.0	M70X3	–
MH363YH–(150–200)t	150; 200	136.0	300.0	60.0	79.0	M90X3	–
MH363YH–300t	300	160.0	500.0	80.0	90.0	M120X3	–
	lb/inches (conversion of above dimensions)						
MH363YH–(1–5)t	2,204.6–11,023.1	1.06	3.35	0.31	0.98	M24X2	–
MH363YH–(10–20)t	22,046.2; 44,092.5	1.77	5.91	0.87	1.50	M36X2	–
MH363YH–30t	66,138.7	2.13	7.09	1.26	1.89	M42X2	0.97
MH363YH–50t	110,231.1	2.52	7.87	1.65	2.13	M42X2	–
MH363YH–100t	220,462.3	4.02	11.81	1.89	3.11	M70X3	–
MH363YH–(150–200)t	330,693.4; 440,924.5	5.35	11.81	2.36	3.11	M90X3	–
MH363YH–300t	661,386.8	6.30	19.69	3.15	3.54	M120X3	–

Mounting Variation 2 REH or EYH+ BSP363YH

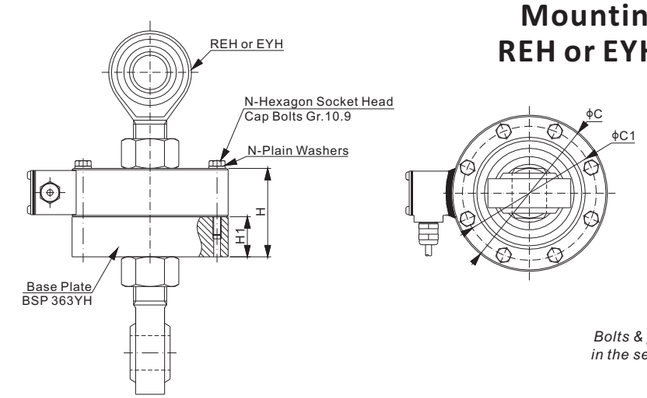

Bolts & plain washers are included in the set of Base Plate BSP363YH

DIMENSIONS

PART NUMBER	LOAD CELL CAPACITY	C	C1	H	H1	N	Matching Bolts	Matching REH or EYH	Weight Approx. (kg)
	t/mm								
BSP363YH–(1–5)t	1–5	113.0	97.0	64.0	29.0	8	M6X50	REH–M24	–
BSP363YH–(10–20)t	10; 20	155.0	130.0	90.0	45.0	12	M10X60	EYH–M36	–
	lb/inches (conversion of above dimensions)								
BSP363YH–(1–5)t	2,204.6–11,023.1	4.45	3.82	2.52	1.14	8	M6X50	REH–M24	–
BSP363YH–(10–20)t	22,046.2; 44,092.5	6.10	5.12	3.54	1.77	12	M10X60	EYH–M36	–

© 2025 ANYLOAD V1 dimensions and specifications subject to change without notice

202UA

Aluminum

RoHS

Features:

- Low Profile-Provides ability for scales of roughly 25mm height, in various rectangular shapes / sizes
- Current Calibrated: No J-Box w/Trim Pot required
  Direct corner replacement w/o need for re-calibration
- Rated output of 0.9mV/V±0.1%: Pre-derated for ease of planar beam selection for scale capacity
  EX: For a 60kg scale capacity-simply use 4x202UA-15kg's
  Enables full weight capacity to roll up on scale edge w/o fear of overload

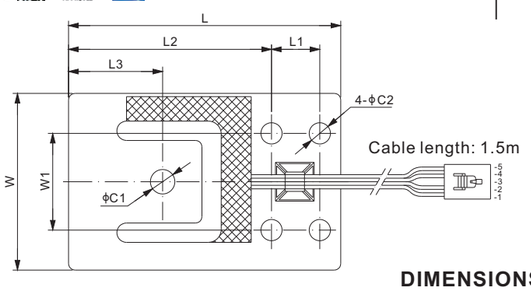

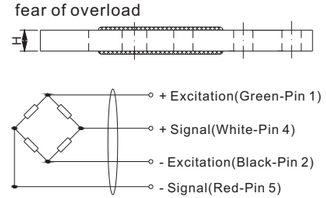

Optional: with a 4 conductor ribbon cable and Female connector: 104257-4 + Crimp:1-104481-0 (interchange with AMP#103957-4). Part number needs to add suffix-02 for this option.

DIMENSIONS

RATED CAPACITY	C1	C2	H	L	L1	L2	L3	W	W1
kg/mm									
3.75	5.1	5.1	2.0	70.0	14.0	51.1	23.1	39.0	27.8
7.5	5.1	5.1	3.0	70.0	14.0	51.1	23.1	39.0	27.8
15	7.6	5.1	4.1	70.0	14.0	51.1	23.1	39.0	27.8
37.5	7.6	6.6	4.8	76.2	15.0	55.2	25.9	44.5	30.0
75	7.6	6.6	6.5	84.5	15.0	63.0	29.2	54.8	30.0
150	9.1	8.1	7.9	107.3	22.9	76.6	30.7	69.9	44.5
375	9.1	9.8	12.7	119.4	25.4	84.9	32.3	76.1	50.8

SPECIFICATIONS

Full Scale Output	0.9 mV/V ± 0.1%	**Element Material**	Aluminum, Clear Anodized
Calibration in mV/V/Ω	± 0.05%	**Recommended Excitation**	10V (15V Maximum)
Zero Balance	± 0.02 mV/V	**Insulation Resistance**	>2 [50V DC] GΩ
Non-linearity	< ± 0.020%	**Nominal Temperature Range**	-10°C to 40°C / 14°F to 104°F
Repeatability	< ± 0.017%	**Safe Overload**	150% of full scale
Hysteresis Error	< ± 0.015%	**Breaking Overload**	300% of full scale
Creep in 30 min.	< ± 0.015%	**Seal Type / IP Rating**	Environmentally Sealed / IP65
Input Resistance	1190Ω ± 10	**Cable Color Code**	Exc+ Green Exc- Black
Output Resistance	1000Ω ± 10		Sig+ White Sig- Red

PART NUMBER*

Rated Capacity	Free end cable	With ribbon cable & connector	Weight (kg) Approx.
3.75kg	202UA-3.75kg	202UA-3.75kg-02	0.1
7.5kg	202UA-7.5kg	202UA-7.5kg-02	0.1
15kg	202UA-15kg	202UA-15kg-02	0.1
37.5kg	202UA-37.5kg	202UA-37.5kg-02	0.1
75kg	202UA-75kg	202UA-75kg-02	0.1
150kg	202UA-150kg	202UA-150kg-02	0.2
375kg	202UA-375kg	202UA-375kg-02	0.4

* ATEX, FM, IECEx approved versions carry the "-Ex" suffix.

INTERCHANGEABLE PRODUCTS

Manufacturer	Model
Flintec	PB
Rice lake	RL BLP**

**C1 of RL BLP is of 1/2-20 UNC

INSTALLATION DRAWING

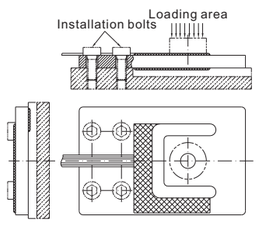

75kg-375kg: OIML MAA C3, Y=28 000

For further available P/N's & specifications per OIML classes, please contact us.

© 2025 ANYLOAD V1 dimensions and specifications subject to change without notice

PLANARS

202WA

Aluminum

RoHS

Features:

- Wing beam-self compensates for overturning moment
  Suited for composite, durable plastic or lightweight aluminum scale bases
  Ideal for picture frame style infant incubator scales, where scale center is hollow for X-Ray access
- Low profile-provides ability for scales of roughly 25mm height, in various rectangular shapes / sizes
- Current Calibrated: No J-Box w/Trim Pot required
  Direct corner replacement w/o need for re-calibration
- Rated output of 0.9mV/V±0.1%: Pre-derated for ease of planar beam selection for scale capacity
  EX: For a 60kg scale capacity-simply use 4x202WA-15kg's
  Enables full weight capacity to roll up on scale edge w/o fear of overload

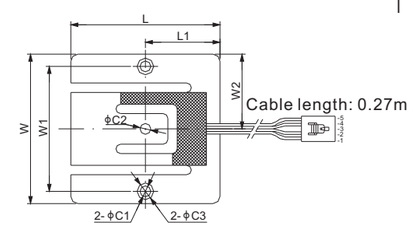

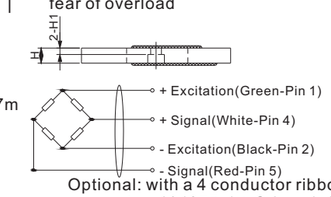

Optional: with a 4 conductor ribbon cable and Female connector: 104257-4 + Crimp:1-104481-0 (interchange with AMP#103957-4). Part number needs to add suffix-02 for this option.

DIMENSIONS

RATED CAPACITY	C1	C2	C3	H	H1	L	L1	W	W1	W2
lb/inches										
12.5−18.75	0.18	0.17	–	0.10	–	2.50	1.25	2.50	2.09	1.25
25	0.18	0.18	–	0.11	–	2.50	1.25	2.50	2.09	1.25
37.5	0.18	0.18	–	0.14	–	2.50	1.25	2.50	2.09	1.25
50	0.18	0.18	–	0.16	–	2.50	1.25	2.50	2.09	1.25
100	0.18	0.18	–	0.25	–	2.50	1.25	2.50	2.09	1.25
200	0.18	0.18	0.28	0.31	0.16	2.50	1.25	2.50	2.09	1.25
kg/mm										
100	4.6	4.6	7.1	8.3	4.0	63.5	31.8	63.5	53.1	31.8
200	4.6	4.6	7.1	11.7	5.0	63.5	31.8	63.5	53.1	31.8
300	4.6	4.6	7.1	14.3	5.0	63.5	31.8	63.5	53.1	31.8

SPECIFICATIONS

Full Scale Output	0.9 mV/V ± 0.1%	**Element Material**	Aluminum, Clear Anodized
Calibration in mV/V/Ω	± 0.05%	**Recommended Excitation**	10V (15V Maximum)
Zero Balance	± 0.02 mV/V	**Insulation Resistance**	>2 [50V DC] GΩ
Non-linearity	< ± 0.017%	**Nominal Temperature Range**	-10°C to 40°C / 14°F to 104°F
Repeatability	< ± 0.017%	**Safe Overload**	150% of full scale
Hysteresis Error	< ± 0.017%	**Breaking Overload**	300% of full scale
Creep in 30 min.	< ± 0.030%	**Seal Type / IP Rating**	Environmentally Sealed / IP65
Input Resistance	1204Ω ± 5	**Cable Color Code**	Exc+ Green Exc- Black
Output Resistance	1000Ω ± 10		Sig+ White Sig- Red

PART NUMBER*

Rated Capacity	Free end cable	With ribbon cable & connector	Weight (kg) Approx.
12.5lb	202WA-12.5lb	202WA-12.5lb-02	0.1
18.75lb	202WA-18.75lb	202WA-18.75lb-02	0.1
25lb	202WA-25lb	202WA-25lb-02	0.1
37.5lb	202WA-37.5lb	202WA-37.5lb-02	0.1
50lb	202WA-50lb	202WA-50lb-02	0.2
100lb	202WA-100lb	202WA-100lb-02	0.2
200lb	202WA-200lb	202WA-200lb-02	0.2
100kg	202WA-100kg	202WA-100kg-02	0.2
200kg	202WA-200kg	202WA-200kg-02	0.2
300kg	202WA-300kg	202WA-300kg-02	0.2

* ATEX, FM, IECEx approved versions carry the "-Ex" suffix.

INSTALLATION DRAWING

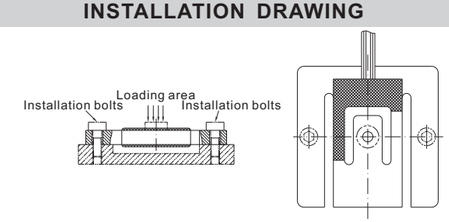

PLANARS

© 2025 ANYLOAD V1 dimensions and specifications subject to change without notice

202WH

ANYLOAD

Alloy Steel

RoHS

Designed & made for extreme high resolution balance.

Features:

- Wing beam-self compensates for overturning moment
  Suited for composite, durable plastic or lightweight aluminum scale bases
  Ideal for picture frame style infant incubator scales, where scale center is hollow for X-Ray access
- Low profile-provides ability for scales of roughly 25mm height, in various rectangular shapes / sizes
- Current Calibrated: No J-Box w/Trim Pot required
  Direct corner replacement w/o need for re-calibration
- Rated output of 0.9mV/V±0.1%: Pre-derated for ease of planar beam selection for scale capacity
  EX: For a 60kg scale capacity-simply use 4x202WH-15kg's
  Enables full weight capacity to roll up on scale edge w/o fear of overload

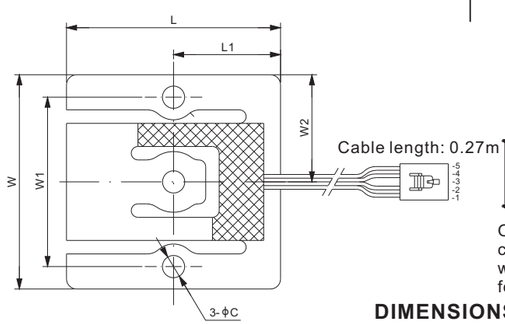

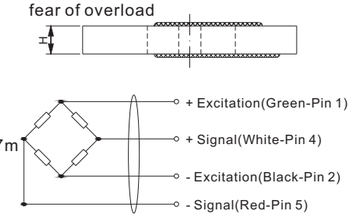

Optional: with a 4 conductor ribbon cable and Female connector: 104257-4 + Crimp:1-104481-0 (interchange with AMP#103957-4). Part number needs to add suffix-02 for this option.

DIMENSIONS

RATED CAPACITY	C	H	L	L1	W	W1	W2
kg/mm							
250	6.6	8.3	63.5	31.8	63.5	50.2	31.8

SPECIFICATIONS

Full Scale Output	0.9 mV/V ± 0.1%	**Recommended Excitation**	10V (15V Maximum)
Calibration in mV/V/Ω	± 0.05%	**Insulation Resistance**	>2 [50V DC] GΩ
Zero Balance	± 0.02 mV/V	**Nominal Temperature Range**	-10°C to 50°C / 14°F to 122°F
Non-linearity	< ± 0.01%	**Safe Overload**	150% of full scale
Repeatability	< ± 0.01%	**Breaking Overload**	300% of full scale
Hysteresis Error	< ± 0.01%	**Seal Type / IP Rating**	Environmentally Sealed / IP65
Creep in 30 min.	< ± 0.01%	**Cable Color Code**	Exc+ Green Exc- Black Sig+ White Sig- Red
Input Resistance	1204Ω ± 5		
Output Resistance	1000Ω ± 10		
Element Material	Alloy Steel		

PART NUMBER*

Rated Capacity	Free end cable	With ribbon cable & connector	Weight (kg) Approx.
250kg	202WH-250kg	202WH-250kg-02	0.2

* ATEX, FM, IECEx approved versions carry the "-Ex" suffix.

INSTALLATION DRAWING

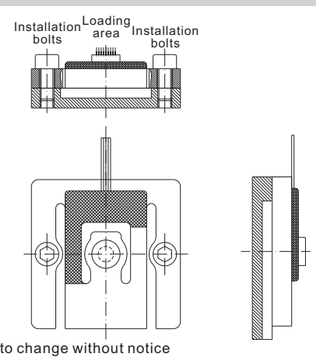

PLANARS

© 2025 ANYLOAD V1 dimensions and specifications subject to change without notice

535TS

ANYLOAD

Stainless Steel

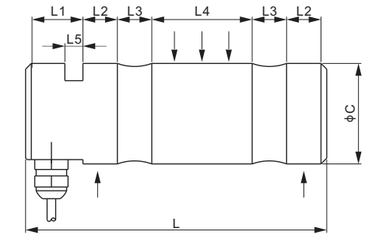

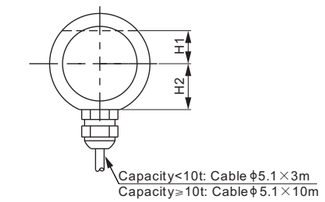

RoHS

DIMENSIONS

RATED CAPACITY	C	H1	H2	L	L1	L2	L3	L4	L5
t/mm									
2–5	35.0	11.5	16.0	105.0	20.0	12.0	12.0	35.0	6.30
10	50.0	20.0	22.5	152.0	30.0	18.0	18.0	48.0	10.5
20	65.0	22.5	28.5	190.0	32.0	20.0	25.0	65.0	10.5
40	85.0	22.5	28.5	256.0	36.0	35.0	28.0	89.0	12.5
70	100.0	34.0	35.0	328.0	40.0	50.0	32.0	120.0	15.0
100	120.0	44.0	45.0	328.0	40.0	50.0	32.0	120.0	15.0
lb/inches (conversion of above dimensions)									
4,409.2–11,023.1	1.38	0.45	0.63	4.13	0.79	0.47	0.47	1.38	0.25
22,046.2	1.97	0.79	0.89	5.98	1.18	0.71	0.71	1.89	0.41
44,092.5	2.56	0.89	1.12	7.48	1.26	0.79	0.98	2.56	0.41
88,184.9	3.35	0.89	1.12	10.08	1.42	1.38	1.10	3.50	0.49
154,323.6	3.94	1.34	1.38	12.91	1.57	1.97	1.26	4.72	0.59
220,462.3	4.72	1.73	1.77	12.91	1.57	1.97	1.26	4.72	0.59

SPECIFICATIONS

Full Scale Output	1.0 mV/V ± 10%	**Recommended Excitation**	10V (15V Maximum)
Zero Balance	± 0.02 mV/V	**Insulation Resistance**	>2 [50V DC] GΩ
Non-linearity	< ± 0.50%	**Compensated Temperature Range**	-10°C to 50°C / 14°F to 122°F
Repeatability	< ± 0.30%	**Safe Overload**	150% of full scale
Hysteresis Error	< ± 0.50%	**Breaking Overload**	400% of full scale
Creep in 30 min.	< ± 0.20%	**Seal Type / IP Rating**	Environmentally Sealed / IP67
Input Resistance	400Ω ± 20	**Cable Color Code**	Exc+ Red Exc- Black Sig+ Green Sig- White Shield Bare
Output Resistance	350Ω ± 3		
Element Material	2Cr13 Stainless Steel		

PART NUMBER*

Rated Capacity	Part No.	Weight Approx. (kg)
2t	535TS-2t-YZ	0.8
5t	535TS-5t-YZ	0.8
10t	535TS-10t-YZ	2.1
20t	535TS-20t-YZ	4.6
40t	535TS-40t-YZ	11.2
70t	535TS-70t-YZ	20.0
100t	535TS-100t-YZ	30.0

* ATEX, FM, IECEx approved versions carry the "-Ex" suffix.

APPLICATION EXAMPLES

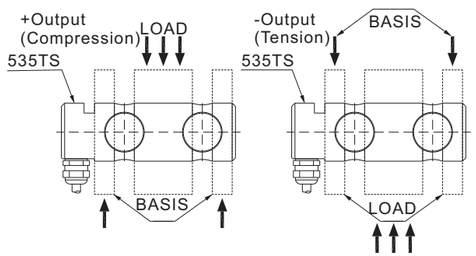

LOAD PINS

© 2025 ANYLOAD V1 dimensions and specifications subject to change without notice

110BH

ANYLOAD

Alloy Steel; Patent Design

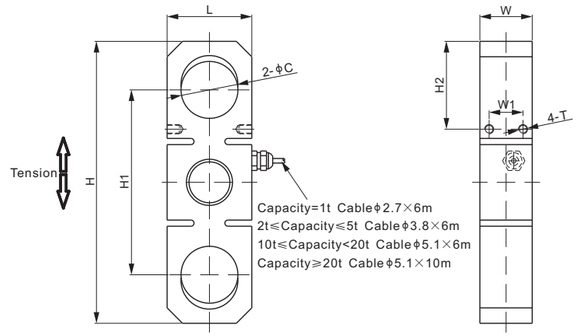

RoHS

DIMENSIONS

RATED CAPACITY	C	H	H1	H2	L	W	W1	T	SUGGESTED SHACKLE
t/mm									
1	15.0	74.0	49.5	20.5	20.0	12.0	7.0	4-M3 Depth5	RBXS-1t or TBX-2t
2	20.0	109.5	75.5	30.5	28.0	15.0	8.0	4-M3 Depth5	SBX-3.25t
5	27.0	140.0	93.0	41.0	38.0	25.0	15.0	4-M4 Depth5	SBX-6.5t
10	37.0	183.0	120.0	57.0	55.0	34.0	22.0	4-M6 Depth8	SBX-12t
20	53.0	252.0	164.0	82.0	74.0	50.0	30.0	4-M6 Depth8	SBX-25t
30	60.0	307.5	202.0	93.0	86.0	60.0	40.0	4-M8 Depth12	SBX-35t
50	73.0	390.0	257.0	116.0	110.0	75.0	40.0	4-M12 Depth20	SBX-55t
75	88.0	486.0	324.0	147.0	135.0	90.0	60.0	4-M12 Depth20	SBX-85t
100	102.0	580.0	389.0	172.0	160.0	100.0	60.0	4-M12 Depth20	SBX-120t
120	102.0	580.0	389.0	172.0	160.0	120.0	60.0	4-M12 Depth20	SBX-120t
lb/inches (conversion of above dimensions)									
2,204.6	0.59	2.91	1.95	0.81	0.79	0.47	0.28	4-M3 Depth0.20	RBXS-1.5t
4,409.2	0.79	4.31	2.97	1.20	1.10	0.59	0.31	4-M3 Depth0.20	SBX-3.25t
11,023.1	1.06	5.51	3.66	1.61	1.50	0.98	0.59	4-M4 Depth0.20	SBX-6.5t
22,046.2	1.46	7.20	4.72	2.24	2.17	1.34	0.87	4-M6 Depth0.31	SBX-12t
44,092.5	2.09	9.92	6.46	3.23	2.91	1.97	1.18	4-M6 Depth0.31	SBX-25t
66,138.7	2.36	12.11	7.95	3.66	3.39	2.36	1.57	4-M8 Depth0.47	SBX-35t
110,231.1	2.87	15.35	10.12	4.57	4.33	2.95	1.57	4-M12 Depth0.79	SBX-55t
165,346.7	3.46	19.13	12.76	5.79	5.31	3.54	2.36	4-M12 Depth0.79	SBX-85t
220,462.2	4.02	22.83	15.31	6.77	6.30	3.94	2.36	4-M12 Depth0.79	SBX-120t
264,554.7	4.02	22.83	15.31	6.77	6.30	4.72	2.36	4-M12 Depth0.79	SBX-120t

SPECIFICATIONS

Full Scale Output	3.0 mV/V ± 10%	**Recommended Excitation**	10V (15V Maximum)
Zero Balance	± 0.02 mV/V	**Insulation Resistance**	>2 [50V DC] GΩ
Non-linearity	< ± 0.017% FS	**Compensated Temperature Range**	-10°C to 50°C / 14°F to 122°F
Repeatability	< ± 0.017% FS	**Safe Overload**	150% of full scale
Hysteresis Error	< ± 0.017% FS	**Breaking Overload**	400% of full scale
Creep in 30 min.	< ± 0.023% FS	**Seal Type / IP Rating**	Environmentally Sealed / IP67
Input Resistance	400Ω ± 20	**Cable Color Code**	Exc+ Red Exc- Black Sig+ Green Sig- White Shield Bare
Output Resistance	350Ω ± 3		
Element Material	Alloy Steel, Nickel Plated		

PART NUMBER*

Rated Capacity	Part No.	Weight Approx. (kg)
1t	110BH-1t	0.2
2t	110BH-2t	0.4
5t	110BH-5t	0.8
10t	110BH-10t	2.4
20t	110BH-20t	5.4
30t	110BH-30t	9.3
50t	110BH-50t	22.0
75t	110BH-75t	35.4
100t	110BH-100t	54.8
120t	110BH-120t	61.0

WEIGH MODULE

Model	Page
110BHM3	155

* ATEX, FM, IECEx approved versions carry the "-Ex" suffix.

1t-2t: NTEP 1:3 000 Class III, Single Cell;
NTEP 1:5 000 Class III, Multiple Cell;
5t-50t: NTEP 1:3 000, up to 1:6 000 Class III, Single Cell and Multiple Cell
1t-10t: OIML MAA C3, Y=15 000
10t-50t: OIML MAA C3, up to C6, Y=13 500

For further available P/N's & specifications per NTEP/OIML classes, please contact us.

TENSION LINKS

© 2025 ANYLOAD V1 dimensions and specifications subject to change without notice

ANYLOAD

110ZHBL

Alloy Steel

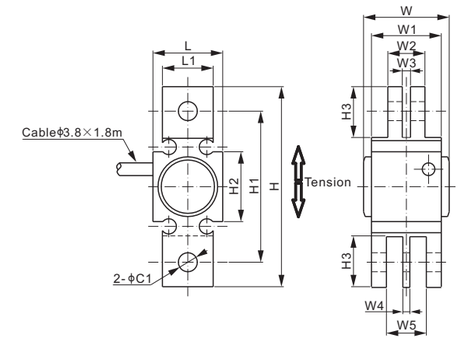

RoHS

DIMENSIONS

RATED CAPACITY	C1	H	H1	H2	H3	L	L1	W	W1	W2	W3	W4	W5
110ZHBL534: kg/mm													
1,500	6.0	63.0	47.6	22.0	16.0	22.0	16.0	27.0	22.0	11.7	2.6	2.2	12.6
110ZHBL634: kg/mm													
2,500	8.0	76.2	57.2	27.7	19.5	25.2	19.0	30.0	25.2	15.5	3.5	3.0	16.8
lb/inches													
2,500	0.32	3.00	2.25	1.09	0.77	0.99	0.75	1.18	0.99	0.61	0.14	0.12	0.66

SPECIFICATIONS

Full Scale Output	1.5 mV/V ± 0.25%	**Recommended Excitation**	10V (15V Maximum)
Zero Balance	± 0.02 mV/V	**Insulation Resistance**	>2 [50V DC] GΩ
Non-linearity	< ± 0.4%	**Compensated Temperature Range**	-10°C to 50°C / 14°F to 122°F
Repeatability	< ± 0.05%	**Safe Overload**	150% of full scale
Hysteresis Error	< ± 0.1%	**Breaking Overload**	400% of full scale
Creep in 30 min.	< ± 0.05%	**Seal Type / IP Rating**	Environmentally Sealed / IP67
Input Resistance	1200Ω ± 60	**Cable Color Code**	Exc+ Red Exc- Black Sig+ Green Sig- White Shield Bare
Output Resistance	1000Ω ± 5		
Element Material	Alloy Steel, Nickel Plated		

PART NUMBER*

Rated Capacity	Part No.	Weight Approx. (kg)
1.5t	110ZHBL534-1.5t	0.2
2.5t	110ZHBL634-2.5t	0.3
2.5Klb	110ZHBL634-2.5Klb	0.3

* ATEX, FM, IECEx approved versions carry the "-Ex" suffix.

TENSION LINKS

© 2025 ANYLOAD V1 dimensions and specifications subject to change without notice

110ES-WL-HP

ANYLOAD

Stainless Steel, Wireless Tension Link

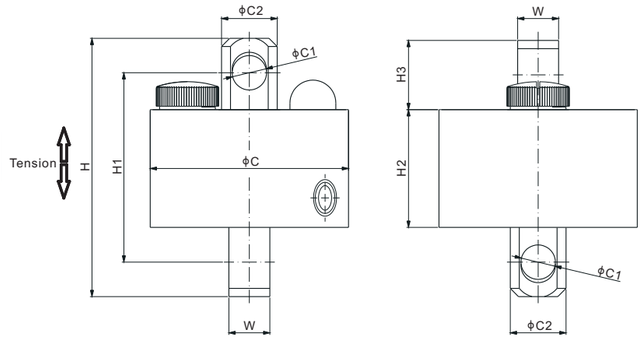

RoHS

Indicators to be ordered separately.
Refer to Page 193 for details.

DIMENSIONS

RATED CAPACITY	C	C1	C2	H	H1	H2	H3	W	SUGGESTED SHACKLE
t/mm									
1	121	13	25	130.4	104	70	30.7	15.5	TBX-2t
2.5	121	15	25	130.4	104	70	30.7	17	TBX-2.5t
5	121	21	34	157.5	115.5	71.8	43.5	25	TBX-5t or RBXS-5t
10	133	31.5	50	197	141.5	72	63.3	40	TBX-12.5t
20	159	42	68	245	171	72.5	87	50	TBX-21t
30	205	45	80	295	206	92	99.5	52	TBX-30t
50	205	63	109	368	250	105	130	79	TBX-50t
100	273	90	152	496	332	146.5	174	112	TBX-110t
Klb/inches (conversion of above dimensions)									
2	4.76	0.51	0.98	5.13	4.10	2.76	1.21	0.61	TBX-2t
5	4.76	0.59	0.98	5.13	4.10	2.76	1.21	0.67	TBX-2.5t
10	4.76	0.83	1.34	6.20	4.55	2.83	1.71	0.98	TBX-5t or RBXS-5t
20	5.24	1.24	1.97	7.76	5.57	2.83	2.49	1.57	TBX-12.5t
40	6.26	1.65	2.68	9.65	6.73	2.85	3.43	1.97	TBX-21t
60	8.07	1.77	3.15	11.61	8.11	3.62	3.92	2.05	TBX-30t
100	8.07	2.48	4.29	14.49	9.84	4.13	5.12	3.11	TBX-50t
200	10.75	3.54	5.98	19.53	13.07	5.77	6.85	4.41	TBX-110t

SPECIFICATIONS

Division	1t-10t: 1:5 000	**Transmission Range**	Up to 30m for lowest power set up and up to 75m for highest power set up(shall have no obstructions)
	20t: 1:4 000		
	30t: 1:3 000	**Operation Time**	Up to 100 hours at 20°C and at the lowest power set up
	50t-100t: 1:5 000	**Rechargeable Battery Type**	3 x AA Alkaline batteries
Max. Safety Load	200%F.S.	**Operating Temp.**	-10°C to 40°C / 14°F to 104°F
Ultimate Load	400%F.S.	**Operating Humidity**	<85% RH under 20°C [68°F]
Enclosure	Stainless Steel Casting	**IP Rating**	IP68 / 69K

PART NUMBER*

Rated Capacity	Frequency	Part No.	Self Weight (kg) (Batteries included)
1t	433 MHz	110ES-1t-WL01-HP	1.7
	915 MHz	110ES-1t-WL02-HP	1.7
2.5t	433 MHz	110ES-2.5t-WL01-HP	1.7
	915 MHz	110ES-2.5t-WL02-HP	1.7
5t	433 MHz	110ES-5t-WL01-HP	2.1
	915 MHz	110ES-5t-WL02-HP	2.1
10t	433 MHz	110ES-10t-WL01-HP	3.5
	915 Mhz	110ES-10t-WL02-HP	3.5

PART NUMBER*

Rated Capacity	Frequency	Part No.	Self Weight (kg) (Batteries included)
20t	433 MHz	110ES-20t-WL01-HP	6.6
	915 MHz	110ES-20t-WL02-HP	6.6
30t	433 MHz	110ES-30t-WL01-HP	10.5
	915 MHz	110ES-30t-WL02-HP	10.5
50t	433 MHz	110ES-50t-WL01-HP	21
	915 MHz	110ES-50t-WL02-HP	21
100t	433 MHz	110ES-100t-WL01-HP	53
	915 MHz	110ES-100t-WL02-HP	53

* ATEX, FM, IECEx approved versions carry the "-Ex" suffix.

TENSION LINKS

www.anyload.com
© 2025 ANYLOAD V1 dimensions and specifications subject to change without notice

ANYLOAD

110RH-WL

Alloy Steel; Wireless Tension Link; Patent Design

TENSLINK™

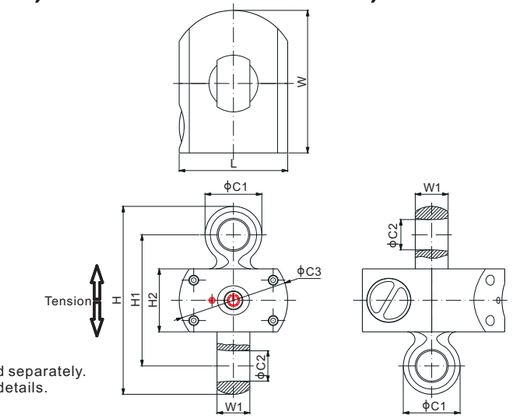

RoHS

* Indicator to be ordered separately.
Refer to Page 193 for details.

DIMENSIONS

RATED CAPACITY	C1	C2	C3	H	H1	H2	L	W	W1	SUGGESTED SHACKLE
t/mm										
0.5; 1; 2	33.0	18.0	80.0	110.0	74.0	38.0	80.0	110.0	18.0	Crosby G-2130-2t or SBX-2t
3	35.0	21.0	80.0	129.0	88.0	38.0	80.0	110.0	25.0	Crosby G-2130-3.25t or SBX-3.25t
5	50.0	27.0	86.0	164.6	110.6	50.0	86.0	113.0	33.0	Crosby G-2130-6.5t or SBX-6.5t
10	63.0	37.0	86.0	205.0	135.0	50.0	86.0	125.0	41.0	Crosby G-2130-12t or SBX-12t
20	90.0	53.0	100.0	249.0	153.0	53.0	100.0	140.0	66.0	Crosby G-2130-25t or SBX-25t
30	87.0	44.0	100.0	248.0	150.0	50.0	100.0	152.0	58.0	Crosby G-2140-30t or TBX-30t
50	115.0	62.0	150.0	321.0	206.0	74.0	150.0	170.0	79.0	Crosby G-2140-55t or TBX-50t
100	170.0	88.0	180.0	442.0	260.0	65.0	180.0	190.0	122.0	Crosby G-2140-120t or TBX-110t
Klb/inches (conversion of above dimensions)										
1; 2; 4	1.30	0.71	3.15	4.33	2.91	1.50	3.15	4.33	0.71	Crosby G-2130-2t or SBX-2t
5	1.38	0.83	3.15	5.08	3.46	1.50	3.15	4.33	0.98	Crosby G-2130-3.25t or SBX-3.25t
10	1.97	1.06	3.39	6.48	4.35	1.97	3.39	4.45	1.30	Crosby G-2130-6.5t or SBX-6.5t
20	2.48	1.46	3.39	8.07	5.31	1.97	3.39	4.92	1.61	Crosby G-2130-12t or SBX-12t
40	3.54	2.09	3.94	9.80	6.02	2.09	3.94	5.51	2.60	Crosby G-2130-25t or SBX-25t
60	3.43	1.73	3.94	9.76	5.91	1.97	3.94	5.98	2.28	Crosby G-2140-30t or TBX-30t
100	4.53	2.44	5.91	13.03	8.11	2.91	5.91	6.69	3.11	Crosby G-2140-55t or TBX-50t
200	6.69	3.46	7.09	17.40	10.24	2.56	7.09	7.48	4.80	Crosby G-2140-120t or TBX-110t

SPECIFICATIONS

Division	500kg	0.1kg	**Combined Error**	0.03%
	1t	0.2kg	**Max. Safety Load**	200% of full scale
	2t	0.5kg	**Ultimate Load**	500% of full scale
	3t, 5t	1kg	**Transmission Range**	Up to 30m at lowest power setting.
	10t	2kg		Up to 75m at highest power setting, unobstructed
	20t	5kg	**Rechargeable Battery Type**	3×AA Alkaline batteries
	30t, 50t	10kg	**Operation Time**	Up to 100 hours at 20°C and at the lowest power setting
	100t	20kg	**Operating Humidity**	<85% RH under 20°C[68°F]
IP Rating	IP67		**Operating Temperature**	-10°C to 50°C / 14°F to 122°F
Enclosure	Alloy Steel, Powder Coating			

PART NUMBER*

Rated Capacity	Frequency	Part No.	Self Weight Approx. (kg)
500kg	433 MHz	110RH-ST-500kg-WL01	0.6
	915 MHz	110RH-ST-500kg-WL02	0.6
1t	433 MHz	110RH-ST-1t-WL01	0.6
	915 MHz	110RH-ST-1t-WL02	0.6
2t	433 MHz	110RH-ST-2t-WL01	0.6
	915 Mhz	110RH-ST-2t-WL02	0.6
3t	433 MHz	110RH-ST-3t-WL01	1.0
	915 Mhz	110RH-ST-3t-WL02	1.0
5t	433 MHz	110RH-ST-5t-WL01	1.4
	915 Mhz	110RH-ST-5t-WL02	1.4

PART NUMBER*

Rated Capacity	Frequency	Part No.	Self Weight Approx. (kg)
10t	433 MHz	110RH-ST-10t-WL01	2.3
	915 MHz	110RH-ST-10t-WL02	2.3
20t	433 MHz	110RH-ST-20t-WL01	4.7
	915 MHz	110RH-ST-20t-WL02	4.7
30t	433 MHz	110RH-30t-WL01	5.5
	915 MHz	110RH-30t-WL02	5.5
50t	433 MHz	110RH-50t-WL01	16.0
	915 Mhz	110RH-50t-WL02	16.0
100t	433 MHz	110RH-100t-WL01	35.0
	915 Mhz	110RH-100t-WL02	35.0

* ATEX, FM, IECEx approved versions carry the "-Ex" suffix.

TENSION LINKS

www.anyload.com
© 2025 ANYLOAD V1 dimensions and specifications subject to change without notice

110RH; 110RH-ST

Alloy Steel; Patent Design

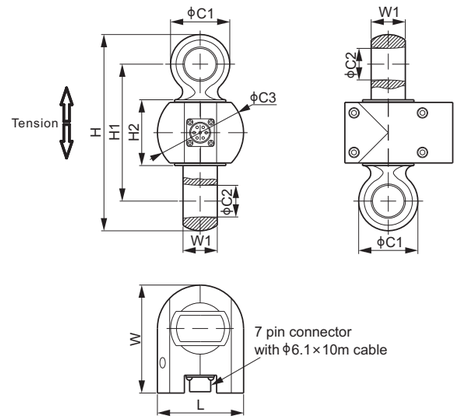

RoHS

DIMENSIONS

RATED CAPACITY	C1	C2	C3	H	H1	H2	L	W	W1	SUGGESTED SHACKLE
110RH: t/mm										
0.5; 1; 2	30.0	14.0	43.0	102.0	68.0	38.0	43.0	63.0	15.0	TBX-2t
3	32.0	18.0	55.0	119.0	80.0	39.0	55.0	83.0	18.0	TBX-3.25t
5	45.0	24.0	66.0	153.0	104.0	50.0	66.0	82.0	26.0	TBX-5t
10	60.0	33.0	73.0	195.0	125.0	50.0	73.0	90.5	40.0	TBX-12.5t
20	75.0	41.0	82.0	225.0	145.0	53.0	82.0	110.0	53.0	TBX-21t
30	87.0	44.0	92.0	248.0	150.0	50.0	92.0	125.0	58.0	Crosby G-2140-30t or TBX-30t
50	115.0	62.0	130.0	331.0	206.0	74.0	130.0	159.5	79.0	Crosby G-2140-55t or TBX-50t
100	170.0	88.0	–	442.0	260.0	65.0	176.0	213.0	122.0	Crosby G-2140-120t or TBX-110t
lb/inches (conversion of above dimensions)										
1,102.3; 2,205.1; 4,409.2	1.18	0.55	1.69	4.02	2.68	1.50	1.69	2.48	0.59	TBX-2t
6,613.9	1.26	0.71	2.17	4.69	3.15	1.54	2.17	3.27	0.71	TBX-3.25t
11,023.1	1.77	0.94	2.60	6.02	4.09	1.97	2.60	3.23	1.02	TBX-5t
22,046.2	2.36	1.30	2.87	7.68	4.92	1.97	2.87	3.56	1.57	TBX-12.5t
44,092.5	2.95	1.61	3.23	8.86	5.71	2.09	3.23	4.33	2.09	TBX-21t
66,138.7	3.43	1.73	3.62	9.76	5.91	1.97	3.62	4.92	2.28	Crosby G-2140-30t or TBX-30t
110,231.1	4.53	2.44	5.12	13.03	8.11	2.91	5.12	6.28	3.11	Crosby G-2140-55t or TBX-50t
220,462.3	6.69	3.46	–	17.4	10.24	2.56	6.93	8.39	4.80	Crosby G-2140-120t or TBX-110t
110RH-ST: t/mm										
0.5; 1; 2	33.0	18.0	43.0	110.0	74.0	38.0	43.0	63.0	18.0	Crosby G-2130-2t or SBX-2t or TBX-2.5t
3	35.0	21.0	55.0	129.0	88.0	39.0	55.0	83.0	25.0	Crosby G-2130-3.25t or SBX-3.25t
5	50.0	27.0	66.0	164.6	110.6	50.0	66.0	82.0	33.0	Crosby G-2130-6.5t or SBX-6.5t
10	63.0	37.0	73.0	205.0	135.0	50.0	73.0	90.5	41.0	Crosby G-2130-12t or SBX-12t
20	90.0	53.0	82.0	249.0	153.0	53.0	82.0	110.0	66.0	Crosby G-2130-25t or SBX-25t
lb/inches (conversion of above dimensions)										
1,102.3; 2,205.1; 4,409.2	1.30	0.71	1.69	4.33	2.91	1.50	1.69	2.48	0.71	Crosby G-2130-2t or SBX-2t or TBX-2.5t
6,613.9	1.38	0.83	2.17	5.08	3.46	1.54	2.17	3.27	0.98	Crosby G-2130-3.25t or SBX-3.25t
11,023.1	1.97	1.06	2.60	6.48	4.35	1.97	2.60	3.23	1.30	Crosby G-2130-6.5t or SBX-6.5t
22,046.2	2.48	1.46	2.87	8.07	5.31	1.97	2.87	3.56	1.61	Crosby G-2130-12t or SBX-12t
44,092.5	3.54	2.09	3.23	9.80	5.02	2.09	3.23	4.33	2.60	Crosby G-2130-25t or SBX-25t

© 2025 ANYLOAD V1 dimensions and specifications subject to change without notice

ANYLOAD
110RH; 110RH-ST
Alloy Steel; Patent Design

SPECIFICATIONS

Full Scale Output	2.0 mV/V ± 0.25%	**Recommended Excitation**	10V (15V Maximum)
Zero Balance	± 0.02 mV/V	**Insulation Resistance**	>2 [50V DC] GΩ
Non-linearity	< ± 0.03%	**Compensated Temperature Range**	-10°C to 50°C / 14°F to 122°F
Repeatability	< ± 0.03%	**Safe Overload**	200% of full scale
Hysteresis Error	< ± 0.03%	**Breaking Overload**	500% of full scale
Creep in 30 min.	< ± 0.03%	**Seal Type / IP Rating**	Environmentally Sealed / IP67
Input Resistance	1100Ω ± 50	**Cable Color Code**	Exc+ Red, Exc- Black, Sig+ Green, Sig- White, Sen+ Blue, Sen- Yellow, Shield Bare
Output Resistance	1000Ω ± 10		
Element Material	Alloy Steel, Powder Coating		

PART NUMBER**

110RH

Rated Capacity	Part No.	Self Weight with Cable Approx. (kg)
500kg	110RH-T2-500kg	0.8
1t	110RH-T2-1t	0.8
2t	110RH-T2-2t	0.8
3t	110RH-T2-3t	1.2
5t	110RH-T2-5t	2.1
10t	110RH-T2-10t	2.4
20t	110RH-T2-20t	4.4
30t	110RH-T2-30t	6.4
50t	110RH-T2-50t	13.9
100t	110RH-T2-100t	32.7

PART NUMBER**

110RH-ST

Rated Capacity	Part No.*	Self Weight with Cable Approx. (kg)
500kg	110RH-ST-T2-500kg	1.1
1t	110RH-ST-T2-1t	1.1
2t	110RH-ST-T2-2t	1.1
3t	110RH-ST-T2-3t	1.3
5t	110RH-ST-T2-5t	2.0
10t	110RH-ST-T2-10t	2.5
20t	110RH-ST-T2-20t	4.0

** 110RH-ST-XX match standard Crosby shackles*
** ATEX, FM, IECEx approved versions carry the "-Ex" suffix.

AVAILABLE OPTIONS

- Input Resistance 400Ω, Output Resistance 350Ω, IP65, part number is named as 110RH-xxt or 110RH-ST-xxt
- Input Resistance 1100Ω, Output Resistance 1000Ω, IP65, part number is named as 110RH-xxt-T1 or 110RH-ST-xxt-T1

0.5t-3t: NTEP 1:3 000 Class III, Single Cell;
NTEP 1:5 000 Class III, Multiple Cell;
5t-50t: NTEP 1:3 000, up to 1:6 000 Class III, Single Cell and Multiple Cell
1t-10t: OIML MAA C3, Y=15 000
10t-50t: OIML MAA C3, up to C6, Y=13 500
For further available P/N's & specifications per NTEP/OIML classes, please contact us.

© 2025 ANYLOAD V1 dimensions and specifications subject to change without notice

101AALS; 101ASLS

ANYLOAD

Aluminum/Stainless Steel

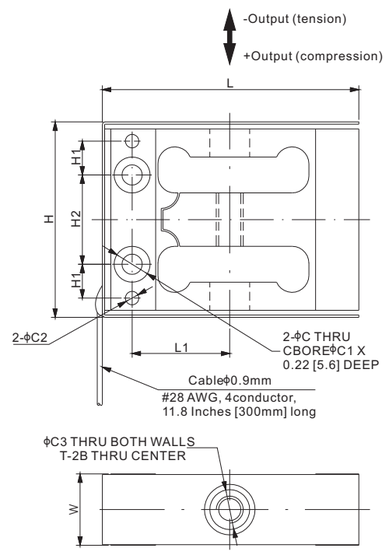

CE ATEX FM APPROVED IECEx RoHS

DIMENSIONS

RATED CAPACITY	C	C1	C2	C3	H	H1	H2	L	L1	T	W
lb/inches											
2.2–100	0.14	0.25	–	0.28	1.37	–	0.63	1.80	0.69	#10–32 UNF	0.50
200	0.14	0.25	0.09	0.28	1.37	0.22	0.63	1.80	0.69	#10–32 UNF	0.50
300–500	0.21	0.34	0.09	0.28	1.37	0.24	0.63	1.80	0.69	1/4–28 UNF	0.50
kg/mm (conversion of above dimensions)											
1.00–45.36	3.6	6.4	–	7.1	34.8	–	15.9	45.7	17.4	#10–32 UNF	12.7
90.72	3.6	6.4	2.4	7.1	34.8	5.5	15.9	45.7	17.4	#10–32 UNF	12.7
136.08–226.80	5.4	8.6	2.4	7.1	34.8	6.0	15.9	45.7	17.4	1/4–28 UNF	12.7

SPECIFICATIONS

Full Scale Output	2.0 mV/V ± 20%	**Element Material**	Aluminum, Clear Anodized (2.2-100lb) 17-4PH stainless steel (200-500lb)
Zero Balance	± 0.02 mV/V		
Non-linearity	< ± 0.02% (2.2-100lb) < ± 0.06% (200-500lb)	**Recommended Excitation** **Insulation Resistance**	10V (15V Maximum) >0.5 [50V DC] GΩ
Repeatability	< ± 0.02%	**Nominal Temperature Range**	-10°C to 40°C / 14°F to 104°F(Aluminum) -10°C to 50°C / 14°F to 122°F (17-4PH stainless steel)
Hysteresis Error	< ± 0.02% (2.2-100lb) < ± 0.06% (200-500lb)		
Creep in 30 min.	< ± 0.025%	**Seal Type / IP Rating**	IP30
Input Resistance	1050Ω ± 15	**Cable Color Code**	Exc+ Green Exc- Black Sig+ White Sig- Red
Output Resistance	1000Ω ± 3		

PART NUMBER*

Rated Capacity	Deflection Emax(inch)	Safe Overload(lb)	Part No.	Weight Approx.(lb)
2.2lb	0.006-0.010	100	101AALS-2.2lb	0.1
5lb	0.005-0.008	100	101AALS-5lb	0.1
10lb	0.003-0.008	100	101AALS-10lb	0.1
25lb	0.003-0.007	150	101AALS-25lb	0.1
50lb	0.004-0.007	150	101AALS-50lb	0.1
100lb	0.004-0.008	300	101AALS-100lb	0.1
200lb	0.003-0.007	400	101ASLS-200lb	0.3
300lb	-	600	101ASLS-300lb	0.3
500lb	0.005-0.009	750	101ASLS-500lb	0.3

* ATEX, FM, IECEx approved versions carry the "-Ex" suffix.

www.anyload.com
© 2025 ANYLOAD V1 dimensions and specifications subject to change without notice

ANYLOAD

101RS

Stainless Steel

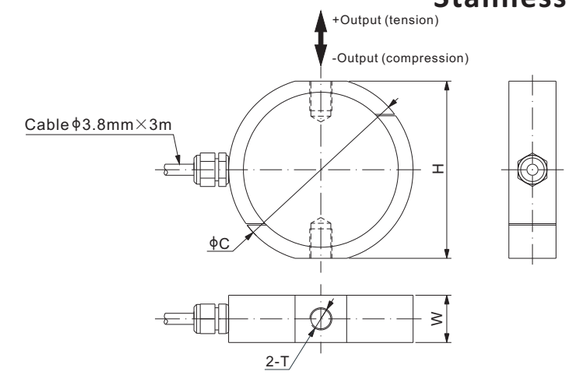

CE ATEX FM APPROVED IECEx RoHS

DIMENSIONS

RATED CAPACITY	C	H	W	T
N/mm				
100,250,500,750	50.0	48.0	12.4	M6 Depth8
lb/inches (conversion of above dimensions)				
22.48,56.2,112.4,168.6	1.97	1.89	0.49	M6 Depth0.31

SPECIFICATIONS

Full Scale Output	2.0 mV/V ± 1%	**Recommended Excitation**	10V (15V Maximum)
Zero Balance	± 0.02 mV/V	**Insulation Resistance**	>2 [50V DC] GΩ
Non-linearity	< ± 0.050%	**Compensated Temperature Range**	-10°C to 50°C / 14°F to 122°F
Repeatability	< ± 0.020%	**Safe Overload**	150% of full scale
Hysteresis Error	< ± 0.10%	**Breaking Overload**	300% of full scale
Creep in 30 min.	< ± 0.10%	**Seal Type / IP Rating**	Environmentally Sealed / IP66
Input Resistance	400Ω ± 20	**Cable Color Code**	Exc+ Red Exc- Black Sig+ Green Sig- White Shield Bare
Output Resistance	350Ω ± 3		
Element Material	17-4PH Stainless Steel		

PART NUMBER*

Rated Capacity	Part No.	Weight Approx. (kg)
100N	101RS-100N	0.2
250N	101RS-250N	0.2
500N	101RS-500N	0.2
750N	101RS-750N	0.2

* ATEX, FM, IECEx approved versions carry the "-Ex" suffix.

www.anyload.com
© 2025 ANYLOAD V1 dimensions and specifications subject to change without notice

101RSLS

ANYLOAD

Stainless Steel

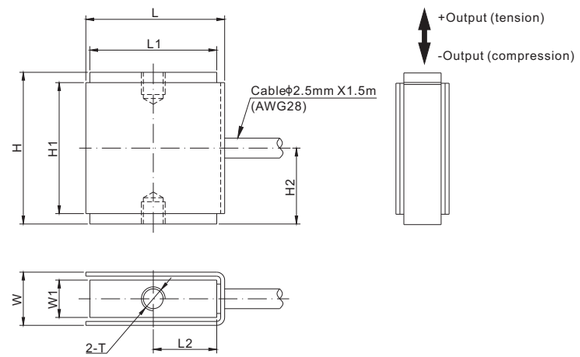

RoHS

DIMENSIONS

RATED CAPACITY	H	H1	H2	L	L1	L2	W	W1	T
lb/inches									
1-100	0.75	0.65	0.38	0.69	0.63	0.31	0.26	0.19	M3 X 0.5 Depth 0.11
G/mm									
250	19.1	16.5	9.6	17.5	16.0	8.0	6.7	4.7	M3 X 0.5 Depth 2.8

SPECIFICATIONS

Full Scale Output	1.0 mV/V ± 20%(250g); 2.0 mV/V ± 20%(1-100lb)	**Element Material**	17-4PH stainless steel
		Recommended Excitation	5V (10V Maximum)
Zero Balance	± 0.02 mV/V	**Insulation Resistance**	>0.5 [50V DC] GΩ
Non-linearity	< ± 0.1%	**Nominal Temperature Range**	-10°C to 50°C / 14°F to 122°F
Repeatability	< ± 0.05%	**Safe Overload**	1000% of full scale(1-25lb); 200% of full scale(50-100lb) only tension
Hysteresis Error	< ± 0.1%		
Creep in 30 min.	< ± 0.1%	**Seal Type / IP Rating**	IP40
Input Resistance	350Ω ± 10	**Cable Color Code**	Exc+ Red Exc- Black Sig+ Green Sig- White Shield Bare
Output Resistance	350Ω ± 5		

PART NUMBER*

Rated Capacity	Part No.	Weight Approx. (kg)
250g	101RSLS-250g	0.1
1lb	101RSLS-1lb	0.1
2lb	101RSLS-2lb	0.1
5lb	101RSLS-5lb	0.1
10lb	101RSLS-10lb	0.1
25lb	101RSLS-25lb	0.1
50lb	101RSLS-50lb	0.1
100lb	101RSLS-100lb	0.1

* ATEX, FM, IECEx approved versions carry the "-Ex" suffix.

www.anyload.com
© 2025 ANYLOAD V1 dimensions and specifications subject to change without notice

ANYLOAD

107CH

Alloy Steel

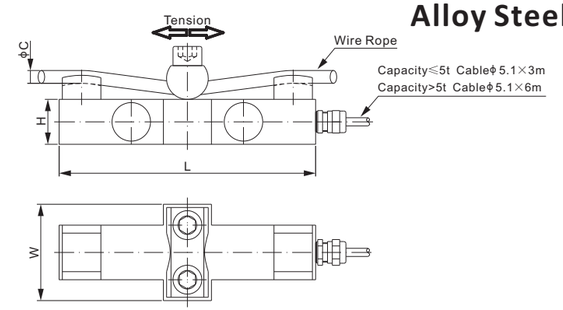

RoHS

DIMENSIONS

RATED CAPACITY	C(wire rope)	H	L	W
kN/mm				
10	6-14	28.0	160.0	60.0
20	10-18	28.0	160.0	60.0
50	16-26	34.0	180.0	68.0
100-140	24-36	40.0	200.0	80.0
200	24-36	46.0	240.0	90.0
kN/inches (conversion of above dimensions)				
10	0.24-0.55	1.10	6.30	2.36
20	0.39-0.71	1.10	6.30	2.36
50	0.63-1.02	1.34	7.09	2.68
100-140	0.94-1.42	1.57	7.87	3.15
200	0.94-1.42	1.81	9.45	3.54

SPECIFICATIONS

Full Scale Output	1.0 - 1.5 mV/V	**Element Material**	Alloy Steel, Nickel Plated
Zero Balance	< ± 1%	**Recommended Excitation**	10V
Non-linearity	< ± 0.3%	**Insulation Resistance**	>5 [50V DC] GΩ
Repeatability	< ± 0.3%	**Compensated Temperature Range**	-20°C to 65°C / -4°F to 149°F
Hysteresis Error	< ± 0.3%	**Safe Overload**	150% of full scale
Creep in 30 min.	< ± 0.05%	**Seal Type / IP Rating**	Environmentally Sealed / IP67
Input Resistance	800Ω ± 50	**Cable Color Code**	Exc+ Red Exc- Black Sig+ Green Sig- White
Output Resistance	700Ω ± 10		

PART NUMBER*

Rated Capacity	Part No.	Weight Approx. (kg)
10kN	107CH-10kN	2.2
20kN	107CH-20kN	2.2
50kN	107CH-50kN	3.5
100kN	107CH-100kN	5.2
200kN	107CH-200kN	8.5

* ATEX, FM, IECEx approved versions carry the "-Ex" suffix.

www.anyload.com
© 2025 ANYLOAD V1 dimensions and specifications subject to change without notice

112BA

ANYLOAD

Aluminum

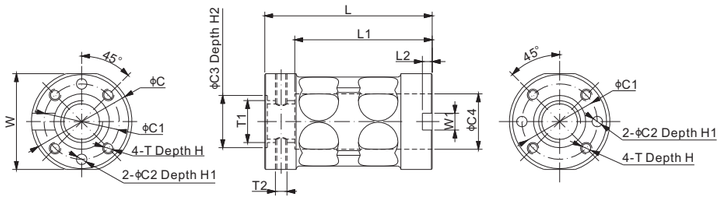

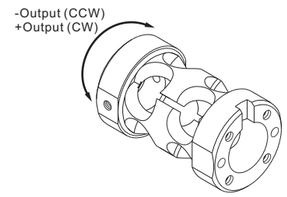

CE ATEX FM APPROVED IECEx RoHS

DIMENSIONS

RATED CAPACITY	C	C1	C2	C3	C4	H	H1	H2	L	L1	L2	W	W1	T	T1	T2
in-oz/inches																
20in-oz~100in-lb	1.20	0.90	0.125	0.62	0.66	0.25	0.25	0.03	2.00	1.64	0.12	1.14	0.20	#6-32UNC	1/2-20 UNF	#6-32UNC
Nm/mm																
0.14~11.3	30.5	22.9	3.2	15.8	16.8	6.4	6.4	0.8	50.8	41.7	3.0	29.0	5.1	M3	M12	M3

SPECIFICATIONS

Full Scale Output	2.0 mV/V ± 20%	**Element Material**	Aluminum, Clear Anodized
Zero Balance	± 0.04 mV/V	**Recommended Excitation**	10V (15V Maximum)
Non-linearity	< ± 0.2%	**Insulation Resistance**	>2 [50V DC] GΩ
Repeatability	< ± 0.05%	**Nominal Temperature Range**	-10°C to 40°C / 14°F to 104°F
Hysteresis Error	< ± 0.2%	**Safe Overload**	150% of full scale
Creep in 30 min.	< ± 0.2%	**Breaking Overload**	300% of full scale
Input Resistance	1000Ω ± 50	**Seal Type / IP Rating**	Environmentally Sealed / IP65
Output Resistance	1000Ω ± 5	**Cable**	No Cable

PART NUMBER*

Rated Capacity	Part No.	Weight Approx. (kg)
20in-oz	112BA-20in-oz	0.07
50in-oz	112BA-50in-oz	0.07
12in-lb	112BA-12in-lb	0.07
50in-lb	112BA-50in-lb	0.07
100in-lb	112BA-100in-lb	0.07
0.14Nm	112BA-0.14Nm	0.07
0.35Nm	112BA-0.35Nm	0.07
1.5Nm	112BA-1.5Nm	0.07
5.6Nm	112BA-5.6Nm	0.07
11.3Nm	112BA-11.3Nm	0.07

* ATEX, FM, IECEx approved versions carry the "-Ex" suffix.

www.anyload.com
© 2025 ANYLOAD V1 dimensions and specifications subject to change without notice

ANYLOAD

247ASLL

Stainless Steel

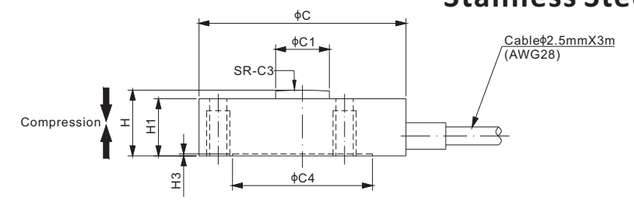

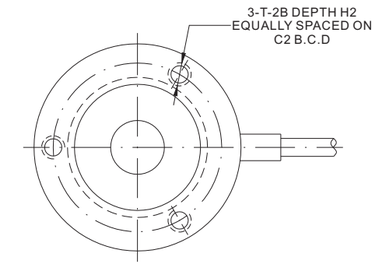

CE ATEX FM APPROVED IECEx RoHS

DIMENSIONS

RATED CAPACITY	C	C1	C2	C3	C4	H	H1	H2	H3	T
Klb/inches										
5-10	1.48	0.43	1.25	3.00	1.08	0.63	0.55	0.25	0.03	#6-32 UNC
kg/mm (conversion of above dimensions)										
2,267.96-4,535.92	37.6	10.9	31.8	76.2	27.4	16.0	14.0	6.40	0.70	#6-32 UNC

SPECIFICATIONS

Full Scale Output	2.0 mV/V ± 20%	**Element Material**	17-4PH Stainless Steel
Zero Balance	± 0.02 mV/V	**Recommended Excitation**	10V (15V Maximum)
Non-linearity	Cap.=5Klb: ≤ ± 0.25%; Cap.=10Klb: ≤ ± 0.50%	**Insulation Resistance**	>0.5 [50V DC] GΩ
		Nominal Temperature Range	-10°C to 50°C / 14°F to 122°F
Repeatability	≤ ± 0.10%	**Safe Overload**	150% of full scale
Hysteresis Error	Cap.=5Klb: ≤ ± 0.25%; Cap.=10Klb: ≤ ± 0.50%	**Breaking Overload**	300% of full scale
		Seal Type / IP Rating	IP64
Creep in 30 min.	< ± 0.1%	**Cable Color Code**	Exc+ Red Exc- Black Sig+ Green Sig- White Shield Bare
Input Resistance	700Ω ± 25		
Output Resistance	700Ω ± 3		

PART NUMBER*

Rated Capacity	Part No.	Weight Approx. (kg)
5Klb	247ASLL-5Klb	0.4
10Klb	247ASLL-10Klb	0.4

* ATEX, FM, IECEx approved versions carry the "-Ex" suffix.

www.anyload.com
© 2025 ANYLOAD V1 dimensions and specifications subject to change without notice

247AA; 247AS

ANYLOAD

Aluminum / Stainless Steel

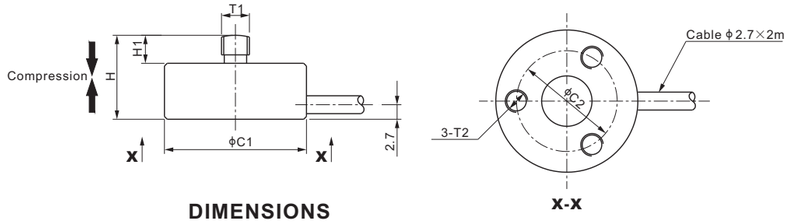

CE ATEX FM APPROVED IECEx RoHS

DIMENSIONS

RATED CAPACITY	C1	C2	H	H1	T1	T2
247AA: kg/mm						
1–20	20.0	15.0	11.0	4.0	M3	M3 Depth5.0
lb/inches (conversion of above dimensions)						
2.20–44.09	0.79	0.59	0.43	0.16	M3	M3 Depth0.20
247AS: kg/mm						
30–200	20.0	15.0	11.0	4.0	M3	M3 Depth5.0
500–1,000	25.4	18.0	15.0	5.0	M5	M4 Depth7.0
5,000	40.0	32.0	25.0	8.0	M12	M4 Depth6.0
lb/inches (conversion of above dimensions)						
66.14–440.92	0.79	0.59	0.43	0.16	M3	M3 Depth0.20
1,102.3–2,204.6	1.00	0.71	0.59	0.20	M5	M4 Depth0.28
11,023.1	1.57	1.26	0.98	0.31	M12	M4 Depth0.24

SPECIFICATIONS

Full Scale Output	Cap.≤30kg: 1.0 mV/V ± 20%; Cap.≥50kg: 1.5 mV/V ± 20%	**Recommended Excitation**	10V (15V Maximum)
		Insulation Resistance	>2 [50V DC] GΩ
Zero Balance	± 0.03 mV/V	**Nominal Temperature Range**	-10°C to 40°C / 14°F to 104°F
Non-linearity	< ± 0.5%	**Safe Overload**	150% of full scale
Repeatability	< ± 0.3%	**Breaking Overload**	300% of full scale
Hysteresis Error	< ± 0.5%	**Seal Type / IP Rating**	Environmentally Sealed / IP66
Creep in 30 min.	< ± 0.5%	**Cable Color Code**	Exc+ Red Exc- Black Sig+ Green Sig- White Shield Bare
Input Resistance	375Ω ± 25		
Output Resistance	350Ω ± 3		
Element Material	Cap.≤20kg: Aluminum, Clear Anodized Cap.≥30kg:17-4PH Stainless Steel		

PART NUMBER*

Rated Capacity	Part No.	Weight Approx. (kg)
1kg	247AA-1kg	0.07
2kg	247AA-2kg	0.07
5kg	247AA-5kg	0.07
10kg	247AA-10kg	0.07
20kg	247AA-20kg	0.07
30kg	247AS-30kg	0.07
50kg	247AS-50kg	0.07
100kg	247AS-100kg	0.07
150kg	247AS-150kg	0.07
200kg	247AS-200kg	0.11
500kg	247AS-500kg	0.11
1t	247AS-1t	0.11
5t	247AS-5t	0.21

* ATEX, FM, IECEx approved versions carry the "-Ex" suffix.

APPLICATION EXAMPLES

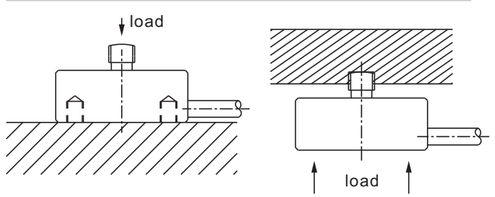

www.anyload.com
© 2025 ANYLOAD V1 dimensions and specifications subject to change without notice

ANYLOAD

247ASLH;247ASLHUN

Stainless Steel

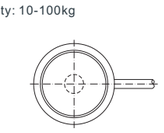

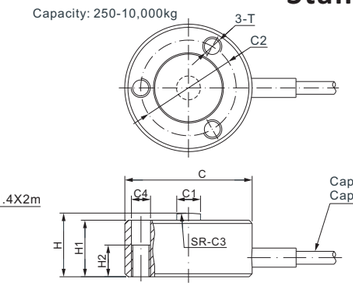

CE ATEX FM APPROVED IECEx RoHS

DIMENSIONS

RATED CAPACITY	C	C1	C2	C3	C4	H	H1	H2	T
247ASLH: kg/mm									
10	9.7	2.3	–	12.7	–	3.6	3.2	–	–
25–100	12.7	3.0	–	19.1	–	4.5	4.0	–	–
250–500	20.0	3.8	15.0	15.0	3.0	10.0	8.9	5.0	M3
1,000–2,000	37.6	10.9	31.8	76.2	3.0	16.0	14.0	6.4	M3
5,000–10,000	50.3	15.2	41.4	200	–	25.4	22.4	–	M4
247ASLHUN: kg/mm									
250–500	20.0	3.8	15.0	15.0	3.5	10.0	8.9	5.0	#6–32 UNC–2B
1,000–2,000	37.6	10.9	31.8	76.2	3.5	16.0	14.0	6.4	#6–32 UNC–2B
5,000–10,000	50.3	15.2	41.4	200	–	25.4	22.4	–	#6–32 UNC–2B

SPECIFICATIONS

Full Scale Output	Cap.≤10kg: ≥0.8 mV/V; Cap.>10kg: 2.0 mV/V ± 20%	**Recommended Excitation**	Cap.≤10kg: 5V (7V Maximum) Cap.>10kg: 10V (15V Maximum)
Zero Balance	Cap.≤10kg: ± 0.03 mV/V Cap.>10kg: ± 0.04 mV/V	**Element Material**	17-4PH Stainless Steel
		Insulation Resistance	>2 [50V DC] GΩ
Non-linearity	< ± 0.5%	**Nominal Temperature Range**	-10°C to 40°C / 14°F to 104°F
Repeatability	< ± 0.5%	**Safe Overload**	150% of full scale
Hysteresis Error	< ± 0.5%	**Breaking Overload**	300% of full scale
Creep in 30 min.	< ± 0.5%	**Seal Type / IP Rating**	Environmentally Sealed / IP66
Input Resistance	Cap.≤500kg: 375Ω ± 25; Cap.>500kg: 700Ω ± 25	**Cable Color Code**	Exc+ Red Exc- Black Sig+ Green Sig- White Shield Bare
Output Resistance	Cap.≤500kg: 350Ω ± 3; Cap.>500kg: 700Ω ± 3		

PART NUMBER*

Rated Capacity	Part No.	Weight Approx. (kg)
10-100kg, No thread		
10kg	247ASLH-10kg	0.09
25kg	247ASLH-25kg	0.09
50kg	247ASLH-50kg	0.09
100kg	247ASLH-100kg	0.09
250kg to 2t, Metric thread		
250kg	247ASLH-250kg	0.11
500kg	247ASLH-500kg	0.11
1t	247ASLH-1t	0.19
2t	247ASLH-2t	0.19
5t	247ASLH-5t	0.42
10t	247ASLH-10t	0.42

* ATEX, FM, IECEx approved versions carry the "-Ex" suffix.

PART NUMBER*

Rated Capacity	Part No.	Weight Approx. (kg)
250kg to 2t, Imperial thread		
250kg	247ASLHUN-250kg	0.11
500kg	247ASLHUN-500kg	0.11
1t	247ASLHUN-1t	0.19
2t	247ASLHUN-2t	0.19
5t	247ASLHUN-5t	0.42
10t	247ASLHUN-10t	0.42

APPLICATION EXAMPLES

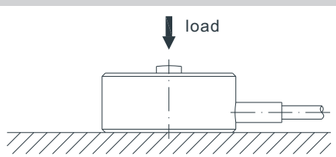

www.anyload.com
© 2025 ANYLOAD V1 dimensions and specifications subject to change without notice

247BS

ANYLOAD

Stainless Steel

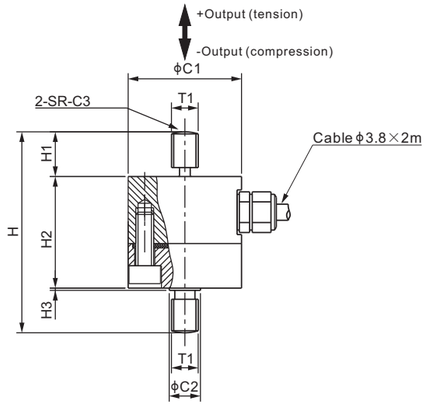

CE ATEX FM APPROVED IECEx RoHS

DIMENSIONS

RATED CAPACITY	C1	C2	C3	H	H1	H2	H3	T1
kg/mm								
30–100	25.4	7.0	10	45.0	10.0	25.0	0.5	M6
lb/inches (conversion of above dimensions)								
66.1–220.5	1.00	0.28	0.39	1.77	0.39	0.98	0.02	M6

SPECIFICATIONS

Full Scale Output	1.0 mV/V ± 20%	**Recommended Excitation**	10V (15V Maximum)
Zero Balance	± 0.03 mV/V	**Insulation Resistance**	>2 [50V DC] GΩ
Non-linearity	< ± 0.3%	**Compensated Temperature Range**	-10°C to 50°C / 14°F to 122°F
Repeatability	< ± 0.1%	**Safe Overload**	150% of full scale
Hysteresis Error	< ± 0.1%	**Breaking Overload**	300% of full scale
Creep in 30 min.	< ± 0.1%	**Seal Type / IP Rating**	Environmentally Sealed / IP66
Input Resistance	375Ω ± 25	**Cable Color Code**	Exc+ Red Exc- Black
Output Resistance	350Ω ± 3		Sig+ Green Sig- White
Element Material	17-4PH Stainless Steel		Shield Bare

PART NUMBER*

Rated Capacity	Part No.	Weight Approx. (kg)
30kg	247BS-30kg	0.13
50kg	247BS-50kg	0.13
100kg	247BS-100kg	0.13

* ATEX, FM, IECEx approved versions carry the "-Ex" suffix.

www.anyload.com
© 2025 ANYLOAD V1 dimensions and specifications subject to change without notice

ANYLOAD

247BSWM

Stainless Steel

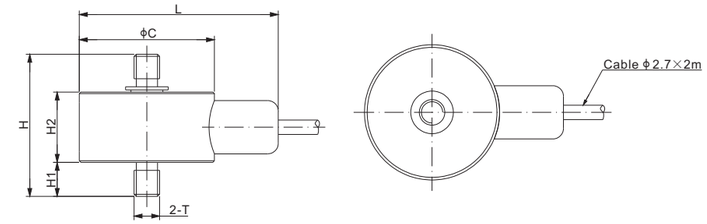

CE ATEX FM APPROVED IECEx RoHS

DIMENSIONS

RATED CAPACITY	C	L	H	H1	H2	T
lb/inches						
10	0.75	1.22	1.01	0.25	0.45	#6–32 UNC–2A
25–100	1.00	1.47	1.05	0.25	0.52	#10–32 UNF–2A
250–1,000	1.00	1.77	1.32	0.38	0.53	1/4–28 UNF–2A
2,000–3,000	1.00	1.77	1.75	0.50	0.72	3/8–24 UNF–2A
5,000	1.25	2.02	2.23	0.63	0.94	1/2–20 UNF–2A
7,500–10,000	1.38	2.15	2.88	0.88	1.09	3/4–16 UNF–2A
kg/mm (conversion of above dimensions)						
4.54	19.1	31.1	25.7	6.4	11.4	#6–32 UNC–2A
11.34–45.36	25.4	37.4	26.7	6.4	13.2	#10–32 UNF–2A
113.40–453.6	25.4	44.9	33.5	9.7	13.4	1/4–28 UNF–2A
907.18–1,360.78	25.4	44.9	44.5	12.7	18.3	3/8–24 UNF–2A
2,267.96	31.8	51.3	56.6	16.0	23.9	1/2–20 UNF–2A
3,401.94–4,535.92	34.9	54.0	73.2	22.4	27.7	3/4–16 UNF–2A

SPECIFICATIONS

Full Scale Output	2.0 mV/V ± 20%	**Element Material**	Stainless Steel
Zero Balance	± 0.04mV/V	**Recommended Excitation**	5V (10V Maximum)
Non-linearity	< ± 0.2%	**Insulation Resistance**	>2 [50V DC] GΩ
Repeatability	< ± 0.1%	**Nominal Temperature Range**	-10°C to 40°C / 14°F to 104°F
Hysteresis Error	< ± 0.2%	**Safe Overload**	150% of full scale
Creep in 30 min.	< ± 0.2%	**Breaking Overload**	300% of full scale
Input Resistance	350Ω ± 10	**Seal Type / IP Rating**	Environmentally Sealed / IP66
Output Resistance	350Ω ± 10		

PART NUMBER*

Rated Capacity	Part No.	Weight Approx. (kg)
10lb	247BSWM-10lb	0.10
25lb	247BSWM-25lb	0.12
50lb	247BSWM-50lb	0.12
100lb	247BSWM-100lb	0.12
250lb	247BSWM-250lb	0.12
500lb	247BSWM-500lb	0.12
1Klb	247BSWM-1Klb	0.12
2Klb	247BSWM-2Klb	0.20
3Klb	247BSWM-3Klb	0.20
5Klb	247BSWM-5Klb	0.20
7.5Klb	247BSWM-7.5Klb	0.40
10Klb	247BSWM-10Klb	0.40

* ATEX, FM, IECEx approved versions carry the "-Ex" suffix.

APPLICATION EXAMPLES

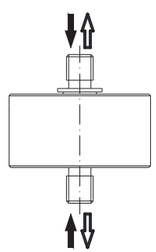

Compression:
+Output cable Color Code:
Exc+ Red Exc- Black
Sig+ Green Sig- White
Shield Bare

Tension:
+Output cable Color Code:
Exc+ Red Exc- Black
Sig+ White Sig- Green
Shield Bare

www.anyload.com
© 2025 ANYLOAD V1 dimensions and specifications subject to change without notice

296AS

ANYLOAD

Stainless Steel

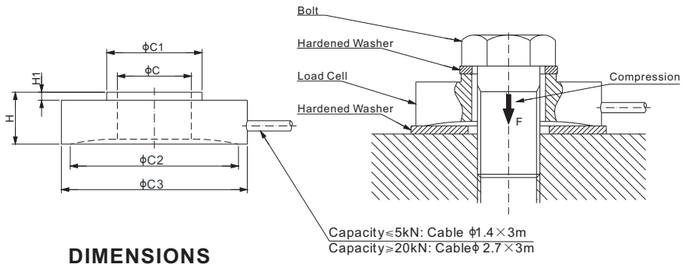

RoHS

DIMENSIONS

RATED CAPACITY	Screw Size	C	C1	C2	C3	H	H1
N/mm							
50-100	M3	3.5	7.5	22.0	25.4	7.1	1.1
500	M6	6.8	11.0	22.0	25.4	7.1	1.1
5,000	M10	10.1	13.0	23.0	25.4	7.1	1.1
20,000	M12	13.2	21.0	31.0	38.1	12.7	1.0
20,000	M16	16.7	21.0	31.0	38.1	12.7	1.0
50,000	M10	10.1	20.0	42.0	50.8	16.0	1.0
50,000	M12	13.2	20.0	42.0	50.8	16.0	1.0
50,000	M16	16.7	22.0	42.0	50.8	16.0	1.0
100,000	M20	20.3	33.0	61.0	76.2	25.4	2.0
100,000	M26	26.2	40.0	61.0	76.2	25.4	2.0
100,000	M32	32.5	42.0	61.0	76.2	25.4	2.0
200,000	M20	20.3	33.0	61.0	76.2	25.4	2.0
200,000	M26	26.2	40.0	61.0	76.2	25.4	2.0
200,000	M32	32.5	42.0	61.0	76.2	25.4	2.0
N/inches							
50-100	1/8	0.14	0.30	0.87	1.00	0.28	0.04
500	1/4	0.27	0.43	0.87	1.00	0.28	0.04
5,000	3/8	0.40	0.51	0.91	1.00	0.28	0.04
20,000	1/2	0.52	0.83	1.22	1.50	0.50	0.04
20,000	5/8	0.66	0.83	1.22	1.50	0.50	0.04
50,000	3/8	0.40	0.79	1.65	2.00	0.63	0.04
50,000	1/2	0.52	0.79	1.65	2.00	0.63	0.04
50,000	5/8	0.66	0.87	1.65	2.00	0.63	0.04
100,000	3/4	0.80	1.30	2.40	3.00	1.00	0.08
100,000	1	1.03	1.57	2.40	3.00	1.00	0.08
100,000	1-1/4	1.28	1.65	2.40	3.00	1.00	0.08
200,000	3/4	0.80	1.30	2.40	3.00	1.00	0.08
200,000	1	1.03	1.57	2.40	3.00	1.00	0.08
200,000	1-1/4	1.28	1.65	2.40	3.00	1.00	0.08

SPECIFICATIONS

Full Scale Output	Cap.≤50N: 1.0 mV/V ± 20%; Cap.>50N: 2.0 mV/V ± 20%	**Element Material**	17-4PH Stainless Steel
		Recommended Excitation	10V (15V Maximum)
Zero Balance	± 0.02 mV/V	**Insulation Resistance**	>2 [50V DC] GΩ
Non-linearity	< ± 0.5%	**Nominal Temperature Range**	-10°C to 40°C / 14°F to 104°F
Repeatability	< ± 0.5%	**Safe Overload**	150% of full scale
Hysteresis Error	< ± 0.5%	**Breaking Overload**	300% of full scale
Creep in 30 min.	< ± 0.5%	**Seal Type / IP Rating**	Environmentally Sealed / IP66
Input Resistance	700Ω ± 25	**Cable Color Code**	Exc+ Red Exc- Black
Output Resistance	700Ω ± 3		Sig+ Green Sig- White Shield Bare

PART NUMBER*

Rated Capacity	Screw Size	Part No.	Weight Approx. (kg)
50N	M3 or 1/8	296ASA1-50N	0.03
100N	M3 or 1/8	296ASA1-100N	0.03
500N	M6 or 1/4	296ASA2-500N	0.03
5kN	M10 or 3/8	296ASA3-5kN	0.03
20kN	M12 or 1/2	296ASB1-20kN	0.11
	M16 or 5/8	296ASB2-20kN	0.11
50kN	M10 or 3/8	296ASC1-50kN	0.25
	M12 or 1/2	296ASC2-50kN	0.25
	M16 or 5/8	296ASC3-50kN	0.25

PART NUMBER*

Rated Capacity	Screw Size	Part No.	Weight Approx. (kg)
100kN	M20 or 3/4	296ASD1-100kN	0.9
	M26 or 1	296ASD2-100kN	0.9
	M32 or 1-1/4	296ASD3-100kN	0.9
200kN	M20 or 3/4	296ASE1-200kN	0.9
	M26 or 1	296ASE2-200kN	0.9
	M32 or 1-1/4	296ASE3-200kN	0.9

* ATEX, FM, IECEx approved versions carry the "-Ex" suffix.

www.anyload.com
© 2025 ANYLOAD V1 dimensions and specifications subject to change without notice

WEIGH MODULES

ANYLOAD

101BHM2

Alloy Steel

Features:

- Assembles: 101BH S-beam load cell
- Capacities: 50kg-2t
- Allows for high accuracy tension loading

Load Cell Certifications:

Load Cell Not Included.

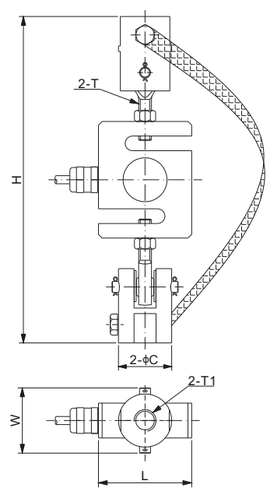

DIMENSIONS

LOAD CELL CAPACITY	C	$H_{Min/Max}$	L	W	T	T1
kg/mm						
50–1,500	41	235/243	50.8	51.0	M12×1.75	M12 Depth22
2,000	61	324/330	76.2	73.0	M18×1.50	M20 Depth32
lb/inches (conversion of above dimensions)						
110.23–3,306.93	1.61	9.25/9.57	2.00	2.01	M12×1.75	M12 Depth0.87
4,409.25	2.40	12.76/12.99	3.00	2.87	M18×1.50	M20 Depth1.26

PART NUMBER

Load Cell Capacity	Part No.	Weight Approx. (kg)
50kg-1.5t	101BHM2-(50-1500)kg	1.3
2t	101BHM2-2t	3.2

www.anyload.com
© 2025 ANYLOAD V1 dimensions and specifications subject to change without notice

101NHM3

Alloy Steel

Features:

- Assembles: 101NH S-beam load cell
- Capacities: 500lb-10Klb
- Reduces "friction" found within Rod End Bearings w/Clevises
- Enables high accuracy tension loading & repeatability

Also available for our stainless steel load cells 101NSGS and 101BS S-Beam load cells up to 10Klb

Load Cell Certifications:

Load Cell Not Included.

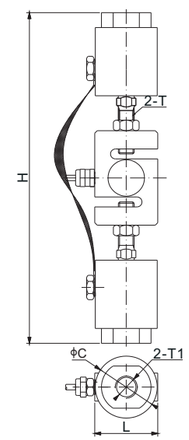

DIMENSIONS

LOAD CELL CAPACITY	$H_{Min/Max}$	C	L	T	T1
Klb/inches					
0.5–3	10.16/10.87	1.97	2.00	1/2–20 UNF	3/4–10 UNC–2B
5–10	13.15/13.78	2.48	3.00	3/4–16 UNF	1–8 UNC–2B
kg/mm (conversion of above dimensions)					
226–1,360	258.0/276.0	50.0	50.8	1/2–20 UNF	3/4–10 UNC–2B
2,267–4,535	334.0/350.0	63.0	76.2	3/4–16 UNF	1–8 UNC–2B

PART NUMBER

Load Cell Capacity	Part No.	Weight Approx.(kg)
500lb-3Klb	101NHM3-(0.5-3)Klb	2.0
5Klb-10Klb	101NHM3-(5-10)Klb	3.9

www.anyload.com
© 2025 ANYLOAD V1 dimensions and specifications subject to change without notice

101NHM2

Alloy Steel

Features:

- Assembles: 101NH S-beam load cell
- Capacities: 50lb-10Klb
- Allows for high accuracy tension loading

Also available for our stainless steel load cells 101NSGS and 101BS S-Beam load cells up to 10Klb

Load Cell Certifications:

Load Cell Not Included.

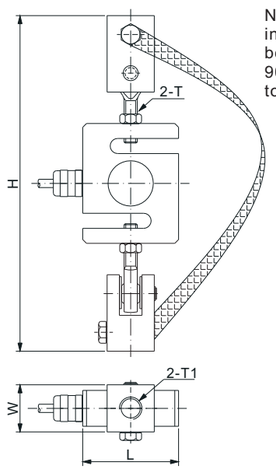

NOTE:
install the bottom rod end bearings & clevises 90° disposed from top set to achieve better performance

DIMENSIONS

LOAD CELL CAPACITY	$H_{Min/Max}$	W	L	T	T1
lb/inches					
50-250	6.69/7.09	0.99	2.00	1/4-28 UNF-2A	1/2-13 UNC-2B
500-2,000	9.57/9.88	1.58	2.00	1/2-20 UNF-2A	3/4-10 UNC-2B
500-2,000 (-A)	9.57/9.88	1.58	2.00	1/2-20 UNF-2A	1/2-13 UNC
5,000	12.13/12.60	2.16	3.00	3/4-16 UNF-2A	3/4-10 UNC-2B
10,000	17.17/18.07	3.15	3.15	3/4-16 UNF-2A	1-8 UNC-2B
kg/mm (conversion of above dimensions)					
22.7-136.1	170/180	25.0	50.8	1/4-28 UNF-2A	1/2-13 UNC-2B
226.8-907.2	243/251	40.0	50.8	1/2-20 UNF-2A	3/4-10 UNC-2B
226.8-907.2 (-A)	243/251	40.0	50.8	1/2-20 UNF-2A	1/2-13 UNC
2,268	308/320	55.0	76.2	3/4-16 UNF-2A	3/4-10 UNC-2B
4,536	436/459	80.0	80.0	3/4-16 UNF-2A	1-8 UNC-2B

PART NUMBER

Load Cell Capacity	Part No.	Weight Approx. (kg)
50lb-250lb	101NHM2-(50-250)lb	0.4
500lb-2Klb	101NHM2-(0.5-2)Klb	1.4
500lb-2Klb	101NHM2-(0.5-2)Klb-A	1.4
5Klb	101NHM2-5Klb	3.2
10Klb	101NHM2-E-10Klb	8.5

www.anyload.com
© 2025 ANYLOAD V1 dimensions and specifications subject to change without notice

MK4-101NHM2

Description:

The 101NHM2 Tension Weigh Module Kit is a robust and reliable solution designed for high-accuracy tension weighing applications. Assembling the 101NH S-beam load cell with M2 mounts, this kit provides exceptional performance in demanding environments, making it ideal for suspended tanks and hoppers, especially in concrete batching plants.

Load Cell Certifications:

PART NUMBER

Load Cell Capacity	Part No.	Weight Approx. (kg/lb)
50lb-250lb	MK4-101NHM2-(50-250)lb-S	2.8/6.2
0.5Klb-2Klb	MK4-101NHM2-(0.5-2)Klb-S	6.8/15.0
0.5Klb-2Klb	MK4-101NHM2-(0.5-2)Klb-A-S	6.8/15.0
5Klb	MK4-101NHM2-5Klb-S	14.0/30.9
10Klb	MK4-101NHM2-E-10Klb-S	35.2/77.6

Features:

- Compatible with 101NH S-beam load cell (load cell sold separately)
- Constructed from durable alloy steel for long-lasting use
- Capacities ranging from 50lb to 10,000lb
- NTEP-certified load cells available from 100lb to 20,000lb for legal-for-trade applications
- OIML-certified load cells from 200kg to 10t for international standards compliance
- CE, RoHS, and Ex certified for a wide range of industrial settings
- Grounding strap included to divert stray currents, ensuring the load cell is protected
- Engineered for precise tension loading applications
- Resistant to hostile environments, ensuring reliability in tough conditions

Complete Set Includes:

- (4 pcs) Four 101NH Alloy Steel S-beam load cells
- (4 pcs) Four 101NHM2 Alloy Steel weigh modules
- (1 pcs) One J04SA-16 water-resistant junction box
- (1 roll) 65ft (20m) cable, 4-wire PVC cable with both copper braid & foil shielding (CB4-5.1-20m)

www.anyload.com
© 2025 ANYLOAD V1 dimensions and specifications subject to change without notice

102BHM1

ANYLOAD

Alloy Steel

Features:

- Assembles: 102BH double ended beam load cell
- Capacities: 10Klb-200Klb/5t-100t
- Center pivoted with self-aligning suspension link design
- Allows for multi-directional movements
- No check rods required

WEIGH MODULES

Load Cell Certifications:

RoHS

Load Cell Not Included.

Capacity:10Klb-25Klb(5t-15t)

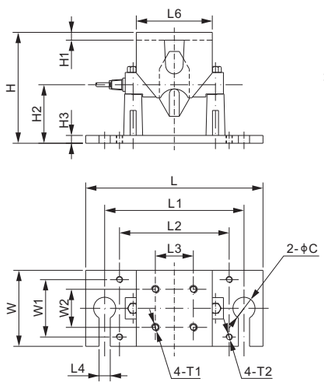

Capacity:50Klb-75Klb(25t-35t)

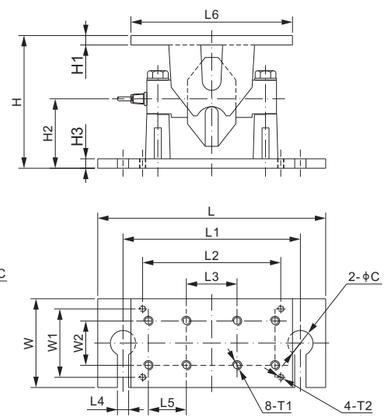

Capacity:100Klb-200Klb

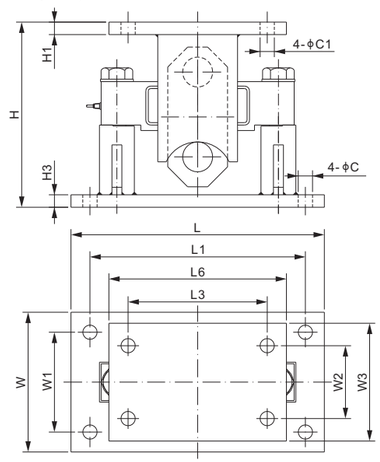

DIMENSIONS

LOAD CELL CAPACITY	C	C1	H	H1	H2	H3	L	L1	L2	L3	L4	L5	L6	W	W1	W2	W3	T1	T2
Klb/inches																			
10–25	1.75	–	8.62	0.62	4.45	0.59	14.00	11.00	8.66	3.00	0.87	–	6.00	6.00	4.53	3.00	–	5/8–11 UNC–2B	1/2–13 UNC
50–75;SE100Klb	2.00	–	10.47	0.75	5.44	0.75	18.00	14.00	10.91	4.00	0.87	3.00	12.76	7.00	5.39	3.50	–	3/4–10 UNC–2B	1/2–13 UNC
100–125	1.13	1.13	14.61	0.98	–	0.98	20.00	17.01	–	10.98	–	–	14.02	11.02	7.87	5.75	9.29	–	–
200	1.34	1.34	19.88	1.57	–	1.57	24.49	21.50	–	14.02	–	–	17.01	15.12	12.01	10.75	15.12	–	–
t/mm																			
5–15	44.5	–	219	15.7	113.1	15.0	355.6	279.4	220.0	76.2	22.5	–	152.4	152.4	115.0	76.2	–	5/8–11 UNC–2B	1/2–13 UNC
25–35	50.8	–	266.0	19.0	138.2	19.0	457.2	355.6	277.0	101.6	22.5	76.2	324.0	177.8	137.0	88.9	–	3/4–10 UNC–2B	1/2–13 UNC
50	28.6	28.6	371.0	25.0	–	25.0	508.0	432.0	–	279.0	–	–	356.0	280.0	200.0	146.0	236.0	–	–
100	34.0	34.0	505.0	40.0	–	40.0	622.0	546.0	–	356.0	–	–	432.0	384.0	305.0	273.0	384.0	–	–

SE refers to small envelope

PART NUMBER

Load Cell Capacity	Part No.	Weight Approx. (kg)
10Klb-25Klb	102BHM1-(10-25)Klb	21.7
50Klb-75Klb	102BHM1-(50-75)Klb	41.0
100Klb	102BHM1-SE100Klb	42.5
100Klb-125Klb	102BHM1-(100-125)Klb	-
200Klb	102BHM1-200Klb	450.0
5t-15t	102BHM1-(5-15)t	21.7
25t-35t	102BHM1-(25-35)t	41.0
50t	102BHM1-50t	-
100t	102BHM1-100t	-

INTERCHANGEABLE REFERENCE

Brand	Model
Rice Lake	TSA
Vishay Sensortronics	65058-TSA

www.anyload.com
© 2025 ANYLOAD V1 dimensions and specifications subject to change without notice

ANYLOAD

102BSM5

Stainless Steel

Features:

- Compact rugged & symmetrical design structure
- Assembly: Model 102BS double ended shear beam load cell
- Capacities: 50Klb-75Klb
- Self-checking with integrated uplift protection
- Top Plate bolts directly to tank leg: no need for additional hardware

WEIGH MODULES

Load Cell Certifications:

RoHS

Load Cell Not Included.

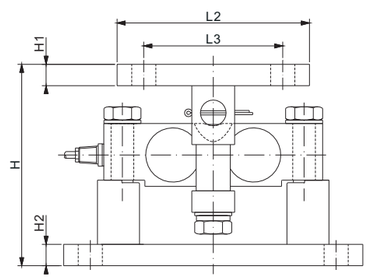

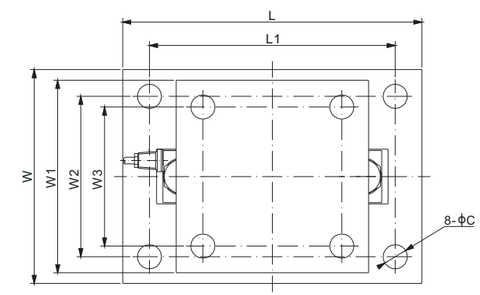

DIMENSIONS

LOAD CELL CAPACITY	C	H	H1	H2	L	L1	L2	L3	W	W1	W2	W3
Klb/inches												
50–75	1.13	9.42	1.00	1.00	14.00	11.50	9.00	6.50	10.00	9.00	7.50	6.50
kg/mm (conversion of above dimensions)												
22,68–34,02	28.7	239.3	25.4	25.4	355.6	292.1	228.6	165.1	254.0	228.6	190.5	165.1

PART NUMBER

Load Cell Capacity	Part No.	Shipping Weight Approx. (kg/lb)
50Klb-75Klb	102BSM5-(50-75)Klb	45.3/99.87

INTERCHANGEABLE REFERENCE

Brand	Model
Rice Lake	RL2100HE

www.anyload.com
© 2025 ANYLOAD V1 dimensions and specifications subject to change without notice

102DHM3

Alloy Steel

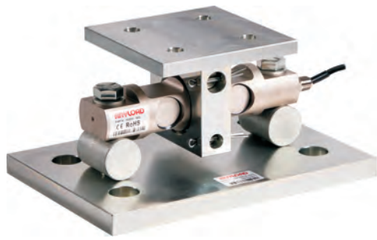

Features:

- Assembles: 102DH double ended beam load cell
- Capacities: 5Klb-250Klb
- Center pivoted and self-checking with anti-lifting protection
- Sliding pin design compensates for thermal expansion and contraction

Load Cell Certifications:

RoHS

Load Cell Not Included.

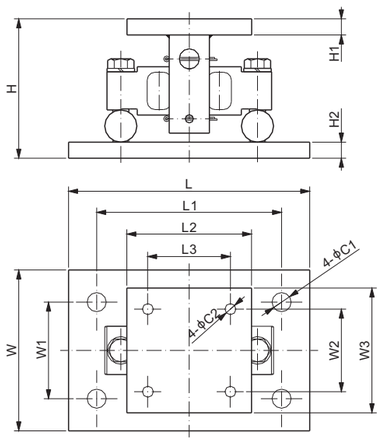

DIMENSIONS

LOAD CELL CAPACITY	C1	C2	H	H1	H2	L	L1	L2	L3	W	W1	W2	W3
Klb/inches													
5–20	1.06	0.56	5.30	0.50	0.75	11	8.00	5.50	3.00	7.50	4	3.00	5.50
30–75	1.19	0.68	8.41	0.75	0.94	15	11.5	7.76	5.12	10.0	6	5.12	7.76
100	1.38	0.81	9.27	1.00	1.25	18	14.0	10.0	7.50	12.0	9	7.50	10.0
150	1.38	0.81	9.62	1.00	1.25	18	14.0	10.0	7.50	12.0	9	7.50	10.0
200–250	1.88	1.06	14.58	1.25	1.50	24	20.0	12.0	9.00	12.0	8	9.00	12.0
t/mm (conversion of above dimensions)													
2.3–9.1	26.9	14.2	134.6	12.7	19.1	279.4	203.2	139.7	76.2	190.5	101.6	76.2	139.7
13.6–34	30.2	17.3	213.6	19.1	23.8	381.0	292.1	197.0	130.0	254.0	152.4	130.0	197.0
45.4	35.1	20.6	235.3	25.4	31.8	457.2	355.6	254.0	190.5	304.8	228.6	190.5	254.0
68	35.1	20.6	244.2	25.4	31.8	457.2	355.6	254.0	190.5	304.8	228.6	190.5	254.0
90.7–113.6	47.8	26.9	370.3	31.8	38.1	610.0	508.0	304.8	228.6	304.8	203.2	228.6	304.8

PART NUMBER

Load Cell Capacity	Part No.	Weight Approx. (kg)
5Klb-20Klb	102DHM3-(5-20)Klb	13.0
30Klb-75Klb	102DHM3-(30-75)Klb	38.8
100Klb	102DHM3-100Klb	62.0
150Klb	102DHM3-150Klb	62.0
200Klb-250Klb	102DHM3-(200-250)Klb	150.0

INTERCHANGEABLE REFERENCE

Brand	Model
Rice Lake	EZ Mount 1*

** H of EZ Mount 1:*
- 10.37inch/263.4mm for 100Klb & 150Klb
- 16.75inch/425.5mm for 200Klb-250Klb

© 2025 ANYLOAD V1 dimensions and specifications subject to change without notice

102DSM3

Stainless Steel

Features:

- Assembles: 102DS double ended beam load cell
- Capacities: 5Klb-250Klb
- Center pivoted and self-checking with anti-lifting protection
- Sliding pin design compensates for thermal expansion and contraction

Load Cell Certifications:

RoHS

Load Cell Not Included.

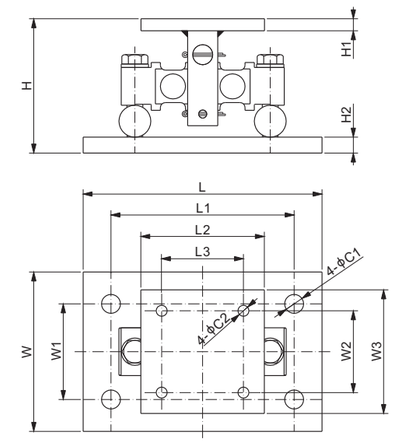

DIMENSIONS

LOAD CELL CAPACITY	C1	C2	H	H1	H2	L	L1	L2	L3	W	W1	W2	W3
Klb/inches													
5–20	1.06	0.56	5.30	0.50	0.75	11	8.00	5.50	3.00	7.50	4	3.00	5.50
30–75	1.19	0.68	8.41	0.75	0.94	15	11.5	7.76	5.12	10.0	6	5.12	7.76
100	1.38	0.81	9.27	1.00	1.25	18	14.0	10.0	7.50	12.0	9	7.50	10.0
150	1.38	0.81	9.62	1.00	1.25	18	14.0	10.0	7.50	12.0	9	7.50	10.0
200–250	1.88	1.06	14.58	1.25	1.50	24	20.0	12.0	9.00	12.0	8	9.00	12.0
t/mm (conversion of above dimensions)													
2.3–9.1	26.9	14.2	134.6	12.7	19.1	279.4	203.2	139.7	76.2	190.5	101.6	76.2	139.7
13.6–34	30.2	17.3	213.6	19.1	23.8	381.0	292.1	197.0	130.0	254.0	152.4	130.0	197.0
45.4	35.1	20.6	235.3	25.4	31.8	457.2	355.6	254.0	190.5	304.8	228.6	190.5	254.0
68	35.1	20.6	244.2	25.4	31.8	457.2	355.6	254.0	190.5	304.8	228.6	190.5	254.0
90.7–113.6	47.8	26.9	370.3	31.8	38.1	610.0	508.0	304.8	228.6	304.8	203.2	228.6	304.8

PART NUMBER

Load Cell Capacity	Part No.	Weight Approx. (kg)
5Klb-20Klb	102DSM3-(5-20)Klb	13.0
30Klb-75Klb	102DSM3-(30-75)Klb	38.8
100Klb	102DSM3-100Klb	62.0
150Klb	102DSM3-150Klb	62.0
200Klb-250Klb	102DSM3-(200-250)Klb	150.0

INTERCHANGEABLE REFERENCE

Brand	Model
Rice Lake	EZ Mount 1 Stainless Steel*

** H of EZ Mount 1 Stainless Steel:*
- 10.37inch/263.4mm for 100Klb-150Klb

© 2025 ANYLOAD V1 dimensions and specifications subject to change without notice

102EHM2

Alloy Steel

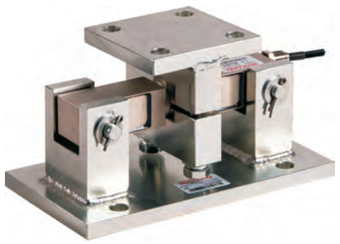

Features:

- Assembles: 102EH double ended beam load cell
- Capacities: 1Klb-75Klb
- Self-checking with anti-lifting protection

WEIGH MODULES

Load Cell Certifications:

Load Cell Not Included.

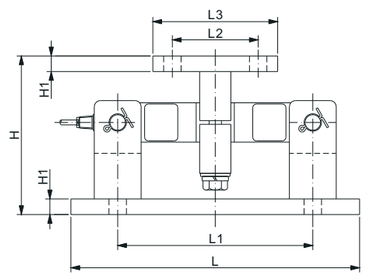

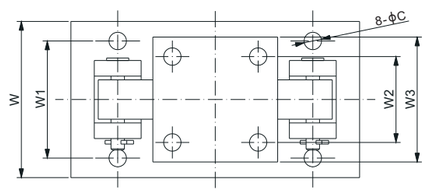

DIMENSIONS

LOAD CELL CAPACITY	C	H	H1	L	L1	L2	L3	W	W1	W2	W3
Klb/inches											
1–5	0.56	5.00	0.50	9.25	6.25	2.75	4.00	5.00	3.75	2.75	4.00
10–25	0.81	7.89	0.75	12.00	7.50	6.00	8.00	8.00	6.00	6.00	8.00
35	0.81	8.02	0.75	12.00	7.50	6.00	8.00	8.00	6.00	6.00	8.00
50–75	0.81	9.31	1.00	16.25	11.50	6.50	9.00	12.00	9.50	6.50	9.00
kg/mm (conversion of above dimensions)											
453.6–2,268	14.2	127.0	12.7	235.0	158.8	69.9	101.6	127.0	95.3	69.9	101.6
4,535.9–11,339.8	20.6	200.4	19.0	304.8	190.5	152.4	203.2	203.2	152.4	152.4	203.2
15,875.7	20.6	203.8	19.0	304.8	190.5	152.4	203.2	203.2	152.4	152.4	203.2
22,679.6–34,019.4	20.6	236.5	25.4	412.8	292.0	165.1	228.6	304.8	241.3	165.1	228.6

PART NUMBER

Load Cell Capacity	Part No.	Weight Approx. (kg)
1Klb-5Klb	102EHM2-(1-5)Klb	7.7
10Klb-25Klb	102EHM2-(10-25)Klb	30.0
35Klb	102EHM2-35Klb	30.0
50Klb-60Klb	102EHM2-(50-60)Klb	67.5
75Klb	102EHM2-75Klb	-

INTERCHANGEABLE REFERENCE

Brand	Model
Rice Lake	RL1600
Mettler Toledo	VLM3C
Vishay Sensortronics	65016-TWA

AVAILABLE OPTION

■ Stainless steel version: 102ESM2 (page 152)

© 2025 ANYLOAD V1 dimensions and specifications subject to change without notice

MK4-102EHM2

Description:

The MK4-102EHM2 weigh module kit uses four double ended beam load cells to provide a high degree of durability for your hopper and tank weighing applications. Common applications include medium-to heavy-capacity bins, hopper, and tank weighing, and other bulk material measurement needs. The kit is a stable weighing solution for medium-to high-capacity ranges. Each kit comes with an IP67 water-resistant junction box and 65ft cable.

Load Cell Certifications:

Features:

- CE , RoHS and ExNepsi certified load cells
- Uplift protenction
- Allowance for thermal expansion
- Junction box equipped with corner trim pots
- Conventional wiring and color code

Complete Set Includes:

- (4 pcs) Four 102EH Alloy Steel double-ended beam load cells
- (4 pcs) Four sets 102EHM2 Alloy Steel weigh modules
- (1 pcs) One J04SA-16 water-resistant junction box
- (1 roll) 65ft (20m) cable, 4-wire PVC cable with both copper braid & foil shielding (CB4-5.1-20m for up to 35Klb, CB4-7.6-20m for 50Klb & 60Klb)

WEIGH MODULES

PART NUMBER

Load Cell Capacity	Part No.	Weight Approx. (kg/lb)
2.5Klb	MK4-102EHM2-2.5Klb-S	39.0/86.0
5Klb	MK4-102EHM2-5Klb-S	39.0/86.0
10Klb	MK4-102EHM2-10Klb-S	133.0/293.2
15Klb	MK4-102EHM2-15Klb-S	133.0/293.2
25Klb	MK4-102EHM2-25Klb-S	133.0/293.2
35Klb	MK4-102EHM2-35Klb-S	137.0/302.0
50Klb	MK4-102EHM2-50Klb-S	316.0/696.7
60Klb	MK4-102EHM2-60Klb-S	316.0/696.7

© 2025 ANYLOAD V1 dimensions and specifications subject to change without notice

102ESM2

Stainless Steel

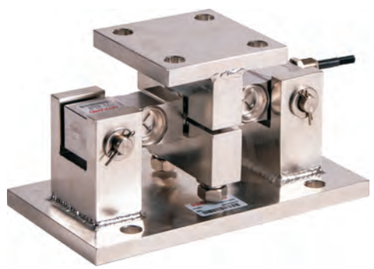

Features:

- Assembles: 102ES double ended beam load cell
- Capacities: 1Klb-75Klb
- Self-checking with anti-lifting protection

Load Cell Certifications:

Load Cell Not Included.

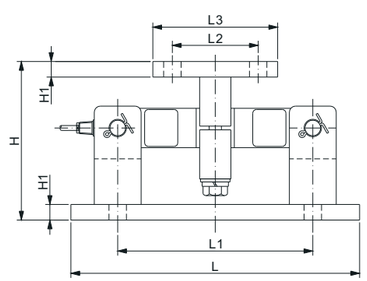

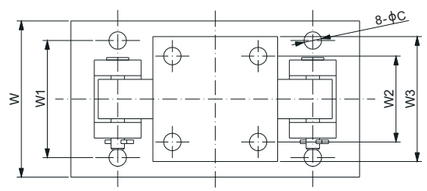

DIMENSIONS

LOAD CELL CAPACITY	C	H	H1	L	L1	L2	L3	W	W1	W2	W3
Klb/inches											
1–5	0.56	5.00	0.50	9.25	6.25	2.75	4.00	5.00	3.75	2.75	4.00
10–25	0.81	7.89	0.75	12.00	7.50	6.00	8.00	8.00	6.00	6.00	8.00
35	0.81	8.02	0.75	12.00	7.50	6.00	8.00	8.00	6.00	6.00	8.00
50–75	0.81	9.31	1.00	16.25	11.50	6.50	9.00	12.00	9.50	6.50	9.00
kg/mm (conversion of above dimensions)											
453.6–2,268	14.2	127.0	12.7	235.0	158.8	69.9	101.6	127.0	95.3	69.9	101.6
4,535.9–11,339.8	20.6	200.4	19.0	304.8	190.5	152.4	203.2	203.2	152.4	152.4	203.2
15,875.7	20.6	203.8	19.0	304.8	190.5	152.4	203.2	203.2	152.4	152.4	203.2
22,679.6–34,019.4	20.6	236.5	25.4	412.8	292.0	165.1	228.6	304.8	241.3	165.1	228.6

PART NUMBER

Load Cell Capacity	Part No.	Shipping Weight Approx. (kg)
1Klb-5Klb	102ESM2-(1-5)Klb	7.7
10Klb-25Klb	102ESM2-(10-25)Klb	30.0
35Klb	102ESM2-35Klb	30.0
50Klb-60Klb	102ESM2-(50-60)Klb	67.5
75Klb	102ESM2-75Klb	-

INTERCHANGEABLE REFERENCE

Brand	Model
Rice Lake	RL1600 HE*
Mettler Toledo	VLM3S

** RL1600 HE: up to 25Klb*

AVAILABLE OPTION

■ Alloy steel version: 102EHM2 (page 150)

© 2025 ANYLOAD V1 dimensions and specifications subject to change without notice

102THM5

Alloy Steel

Features:

- Assembles: 102TH double ended beam load cell
- Capacities: 50-75Klb
- Center pivoted, end-loaded and completely self-centering
- Multi-directional movements in the horizontal plane
- Links provide optimal loading conditions for the load cell
- No check rods required

Load Cell Certifications:

Load Cell Not Included.

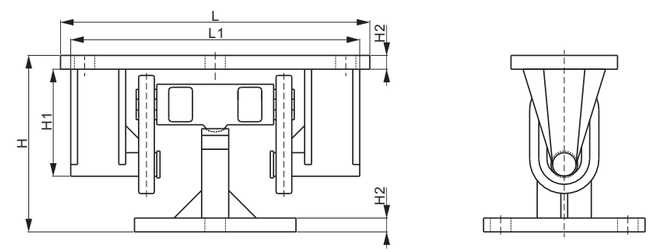

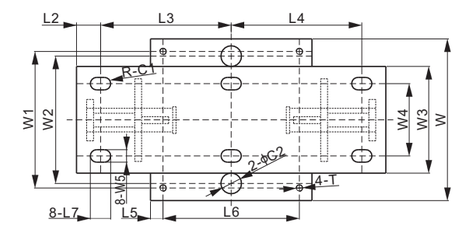

DIMENSIONS

LOAD CELL CAPACITY	C1	C2	H	H1	H2	L	L1	L2	L3	L4	L5	L6	L7	W	W1	W2	W3	W4	W5	T
Klb/inches																				
50–75	R0.45	1.5	12.82	7.78	1.00	22.5	21.02	1.75	9.50	9.50	0.91	9.92	1.48	11.75	9.92	9.25	7.75	5.25	0.91	1/2–20UNF
kg/mm (conversion of above dimensions)																				
22,679.6–34,019.4	R11.55	38.1	325.6	197.6	25.4	571.5	534	44.5	241.3	241.3	23.2	252	37.5	298.4	252	235	196.9	133.4	23.1	1/2–20UNF

PART NUMBER

Load Cell Capacity	Part No.	Weight Approx. (kg)
50Klb-75Klb	102THM5-(50-75)Klb	69.5

INTERCHANGEABLE REFERENCE

Brand	Model
Rice Lake	Translink

© 2025 ANYLOAD V1 dimensions and specifications subject to change without notice

106MHM1

ANYLOAD

Alloy Steel

Features:

- Assembles: 106MS-F-YZ Fatfoot® load cell
- Capacities: 500kg, 1t, 2t, 1Klb, 2.5Klb, 5Klb, 10Klb
- Center pivoted and Self-checking with 50% rated load anti-lifting protection
- All direction for thermal expansion and contraction

Load Cell Certifications:

RoHS

Load Cell Not Included.

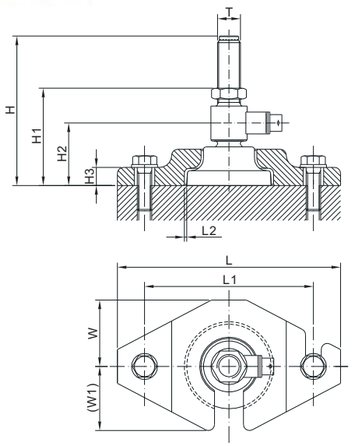

DIMENSIONS

LOAD CELL CAPACITY	H	H1	H2	H3	L	L1	L2	W	W1	T
Klb/inches										
1–2.5	3.75	2.67–3.58	1.72	0.55	6.89	5.51	0.08	1.97	1.95	1/2–20 UNF
5–10	4.87	3.07–4.65	2.00	0.59	7.28	5.51	0.08	2.17	2.13	3/4–16 UNF
t/mm										
0.5–1	95.3	68.0–91.0	43.8	14.0	175.0	140.0	2.0	50.0	49.5	M12
2	111.8	70.0–108.0	43.8	14.0	175.0	140.0	2.0	50.0	49.5	M16

PART NUMBER

Load Cell Capacity	Part No.	Weight Approx. (kg)
1Klb-2.5Klb	106MHM1-(1-2.5)Klb	1.38
5Klb-10Klb	106MHM1-(5-10)Klb	-
0.5t-1t	106MHM1-(0.5-1)t	1.38
2t	106MHM1-2t	-

www.anyload.com
© 2025 ANYLOAD V1 dimensions and specifications subject to change without notice

ANYLOAD

110BHM3

Alloy Steel

Features:

- Assembles: 110BH tension link load cell
- Capacities: 1t-10t
- Self-checking
- Tension loading design with no threaded bolt connection in between

Load Cell Certifications:

RoHS

Load Cell Not Included.

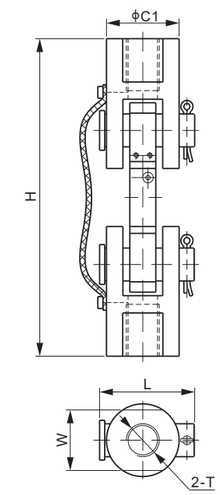

DIMENSIONS

LOAD CELL CAPACITY	C1	H	L	W	T
kg/mm					
1,000	35	125	46	27	1/2–20 UNF Depth20
2,000	45	184	57	35	3/4–16 UNF Depth30
5,000	65	216	77	52	1–14 UNS Depth30
10,000	85	296	98	55	1–1/2–12UNF Depth45
lb/inches (conversion of above dimensions)					
1102.3–2,202.6	1.38	4.92	1.81	1.06	1/2–20 UNF Depth0.79
4,405.3	1.77	7.24	2.24	1.38	3/4–16 UNF Depth1.18
11,013.2	2.56	8.50	3.03	2.05	1–14 UNS Depth1.18
22,026.4	3.35	11.65	3.86	2.16	1–1/2–12UNF Depth1.77

PART NUMBER

Load Cell Capacity	Part No.	Weight Approx. (kg)
1t	110BHM3-1t	0.6
2t	110BHM3-2t	1.2
5t	110BHM3-5t	3.0
10t	110BHM3-10t	6.4

www.anyload.com
© 2025 ANYLOAD V1 dimensions and specifications subject to change without notice

276EHM1

Alloy Steel

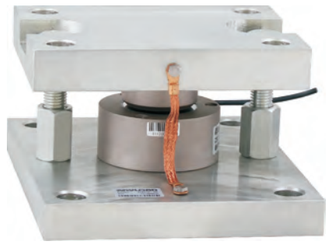

Features:

- Assembles: 276EH compression load cell
- Capacities: 25t - 100t
- Self-checking with anti-lifting protection
- Flexible design allows for multi-directional movements
- Ideal for tank and silo weighing applications
- Low headroom
- Equipped with lateral stops

WEIGH MODULES

Load Cell Certifications:

CE Ex ATEX FM APPROVED IECEx RoHS

Load Cell Not Included.

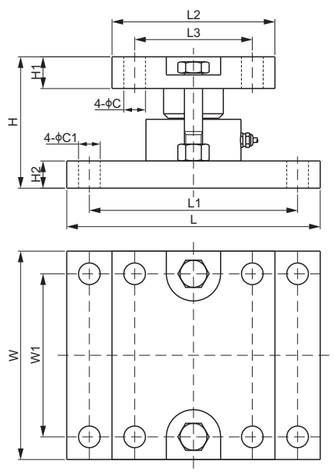

DIMENSIONS

LOAD CELL CAPACITY	C	C1	H	H1	H2	L	L1	L2	L3	W	W1
t/mm											
25	21	21	105	30	25	250	205	160	110	205	160
50	24	24	145	35	30	280	230	180	130	230	180
100	28	28	220	50	45	300	250	200	150	260	200
klb/inches (conversion of above dimensions)											
55.1	0.83	0.83	4.13	1.18	0.98	9.84	8.07	6.30	4.33	8.07	6.30
110.2	0.94	0.94	5.71	1.38	1.18	11.02	9.06	7.09	5.12	9.06	7.09
220.5	1.10	1.10	8.66	1.97	1.77	11.81	9.84	7.87	5.91	10.24	7.87

PART NUMBER

Load Cell Capacity	Part No.	Weight Approx. (kg)
25t	276EHM1-25t	17.3
50t	276EHM1-50t	27.8
100t	276EHM1-100t	49.5

www.anyload.com
© 2025 ANYLOAD V1 dimensions and specifications subject to change without notice

MK4-363TSM1

Description:

The 363TSM1 ThinWeigh® leads the industry as an integrated compression weigh module that is high capacity and ultra low-profile, ideally suited for tank, hopper, and vessel weighing. Our patented internal design significantly improved accuracy and repeatability compared to the traditional load pin design while also improving performance under variable loading conditions and temperature fluctuations. The ThinWeigh® is a superior alternative to conventional weigh modules.

Features:

- Low profile
- Combined load cell and weigh mount
- Side load and uplift protection up to 50% of rated capacity
- Optional top plate available with threaded top holes for symmetrical mounting
- 17-4PH stainless steel construction (IP68/IP69K hermetic seal)

WEIGH MODULES

PART NUMBER

Load Cell Capacity	Part No.	Weight Approx. (kg/lb)
2.5Klb	MK4-363TSM1-2.5Klb-S	9.30/20.5
5Klb	MK4-363TSM1-5Klb-S	14.1/31.1
10Klb	MK4-363TSM1-10Klb-S	14.1/31.1

OPTIONAL MOUNTING TOP PLATE

■ Accessory item number (page159)

www.anyload.com
© 2025 ANYLOAD V1 dimensions and specifications subject to change without notice

ThinWeigh®

Features:

- Super thin, very low profile, excellent for limited space applications, such as tank, hopper and silo weighing
- High grade stainless steel, hermetic seal, IP68/IP69K
- Allows for 360° thermal expansion
- Uplift protection and side load protection
- No need assembly before installation

Mounting Top Plate (not shown in the picture): to order separately

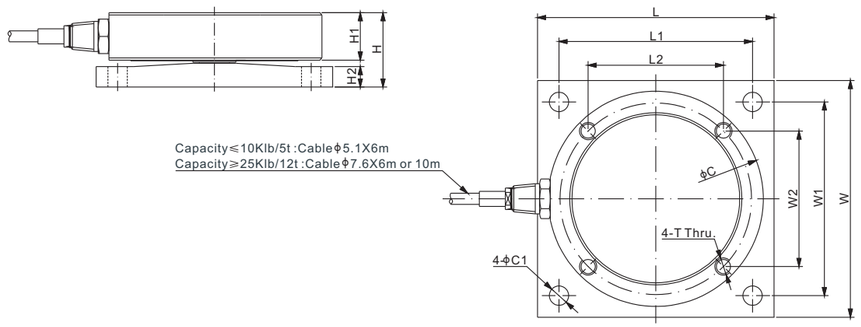

DIMENSIONS

RATED CAPACITY	C	C1	H	H1	H2	L	L1	L2	W	W1	W2	T
Klb/inches												
1–2.5	3.94	0.35	1.02	0.65	0.26	4.33	3.54	2.48	4.33	3.54	2.48	5/16–18 UNC–2B
5–10	4.72	0.35	1.40	0.93	0.33	5.12	4.33	3.00	5.12	4.33	3.00	3/8–16 UNC–2B
25–50	5.75	0.53	2.17	1.38	0.55	6.22	4.92	3.51	6.22	4.92	3.51	1/2–20 UNF–2B
100	8.43	0.83	3.07	1.97	0.83	9.84	8.11	4.98	9.84	8.11	4.98	3/4–16 UNF–2B
200	9.84	1.06	3.82	2.32	1.14	11.22	8.86	5.76	11.22	8.86	5.76	1–14 UNS–2B
t/mm												
0.5–1.2	100.0	9.0	26.0	16.5	6.5	110.0	90.0	62.9	110.0	90.0	62.9	M8×1.25
2.5–5	120.0	9.0	35.5	23.5	8.5	130.0	110.0	76.4	130.0	110.0	76.4	M10×1.5
12–25	146.0	13.5	55.0	35.0	14.0	158.0	125.0	89.1	158.0	125.0	89.1	M12×1.75
50	214.0	21.0	78.0	50.0	21.0	250.0	206.0	126.6	250.0	206.0	126.6	M18X2.5
100	250.0	27.0	97.0	59.0	29.0	285.0	225.0	146.4	285.0	225.0	146.4	M24X3

SPECIFICATIONS

Full Scale Output	3.0 mV/V ± 0.25%	**Element Material**	17-4PH Stainless Steel
Zero Balance	Cap.≤1.2t/2.5Klb:≤ ± 0.04 mV/V Cap.≥2.5t/5Klb:≤ ± 0.02 mV/V	**Recommended Excitation**	10V (15V Maximum)
		Insulation Resistance	>2［50V DC］GΩ
Non-linearity	Cap.≤1.2t/2.5Klb: < ± 0.05%; Cap.: 2.5t-12t/5K-25Klb: < ± 0.1% or < ± 0.3% Cap.≥25t/50Klb: < ± 0.3%	**Thermal Expansion / Contraction or Minor Misalignment**	500kg - 5t / 1K - 10Klb: 2mm 12t - 100t / 25Klb - 50t: 3mm
		Compensated Temperature Range	-10℃ to 50℃ / 14℉ to 122℉
Repeatability	< ± 0.05%	**Safe Overload**	150% of full scale
Hysteresis Error	Cap.≤1.2t/2.5Klb: < ± 0.05%; Cap.: 2.5t-12t/5K-25Klb: < ± 0.1% or < ± 0.3% Cap.≥25t/50Klb: < ± 0.3%	**Breaking Overload**	300% of full scale
		Up Lift Protection	50% of full scale
		Side Load Protection	50% of full scale
Creep in 30 min.	< ± 0.05%	**Seal Type / IP Rating**	IP68 / IP69K
Input Resistance	700Ω ± 10	**Cable Color Code**	Exc+ Red Exc- Black Sig+ Green Sig- White Shield Bare
Output Resistance	700Ω ± 5		

AVAILABLE OPTIONS

■ Alloy Steel construction: 363THM1 (for 100Klb and 200Klb only)

© 2025 ANYLOAD V1 dimensions and specifications subject to change without notice

PART NUMBER

Cable Length: 6m

Rated Capacity	Part No.	Weight Approx. (kg)
1Klb	363TSM1-1Klb	-
2.5Klb	363TSM1-2.5Klb	2.0
5Klb	363TSM1-5Klb	3.2
10Klb	363TSM1-10Klb	3.2
25Klb	363TSM1-25Klb	7.4
50Klb	363TSM1-50Klb	7.4
100Klb	363TSM1-100Klb	27.2
200Klb	363TSM1-200Klb	43.0

Cable Length: 10m

Rated Capacity	Part No.	Weight Approx. (kg)
25Klb	363TSM1-25Klb-10m	7.4
50Klb	363TSM1-50Klb-10m	7.4
100Klb	363TSM1-100Klb-10m	27.6
200Klb	363TSM1-200Klb-10m	43.4

PART NUMBER

Cable Length: 6m

Rated Capacity	Part No.	Weight Approx. (kg)
500kg	363TSM1-500kg	-
1.2t	363TSM1-1.2t	2.0
2.5t	363TSM1-2.5t	3.2
5t	363TSM1-5t	3.2
12t	363TSM1-12t	7.4
25t	363TSM1-25t	7.4
50t	363TSM1-50t	27.2
100t	363TSM1-100t	43.0

Cable Length: 10m

Rated Capacity	Part No.	Weight Approx. (kg)
12t	363TSM1-12t-10m	7.4
25t	363TSM1-25t-10m	7.4
50t	363TSM1-50t-10m	27.6
100t	363TSM1-100t-10m	43.4

MOUNTING TOP PLATE

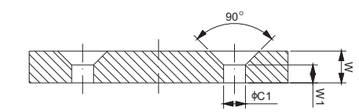

Matching Bolts
Hexagon Socket Countersand Head Screws

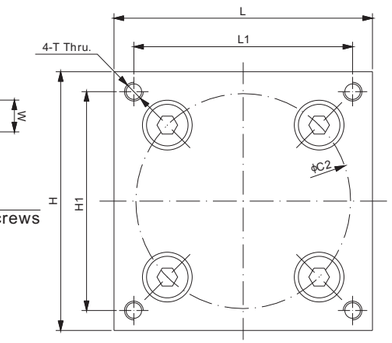

DIMENSIONS

RATED CAPACITY	C1	C2	H	H1	L	L1	W	W1	T
Klb/inches									
1–2.5	0.35	3.50	4.33	3.54	4.33	3.54	0.50	0.24	5/16–18 UNC–2B
5–10	0.43	4.25	5.12	4.33	5.12	4.33	0.63	0.35	3/8–16 UNC–2B
25–50	0.53	4.96	6.22	4.92	6.22	4.92	0.79	0.47	1/2–20 UNF–2B
100	0.83	7.05	9.84	8.11	9.84	8.11	1.00	0.55	3/4–16 UNF–2B
200	1.06	8.15	11.22	8.86	11.22	8.86	1.50	0.91	1–14 UNS–2B
t/mm									
0.5–1.2	9.0	89.0	110.0	90.0	110.0	90.0	12.7	6.2	M8×1.25
2.5–5	11.0	108.0	130.0	110.0	130.0	110.0	16.0	9.0	M10×1.5
12–25	13.5	126.0	158.0	125.0	158.0	125.0	20.0	12.0	M12×1.75
50	21.0	179.0	250.0	206.0	250.0	206.0	25.4	13.9	M18X2.5
100	27.0	207.0	285.0	225.0	285.0	225.0	38.1	23.1	M24X3

PART NUMBER

Rated Capacity	Part No.	Weight Approx. (kg)
1Klb-2.5Klb	TP363TSM1-(1-2.5)Klb	1.3
5Klb-10Klb	TP363TSM1-(5-10)Klb	2.2
25Klb-50Klb	TP363TSM1-(25-50)Klb	4.0
100Klb	TP363TSM1-100Klb	13.0
200Klb	TP363TSM1-200Klb	25.0

PART NUMBER

Rated Capacity	Part No.	Weight Approx. (kg)
0.5t-1.2t	TP363TSM1-(0.5-1.2)t	1.3
2.5t-5t	TP363TSM1-(2.5-5)t	2.2
12t-25t	TP363TSM1-(12-25)t	4.0
50t	TP363TSM1-50t	13.0
100t	TP363TSM1-100t	25.0

© 2025 ANYLOAD V1 dimensions and specifications subject to change without notice

563RSM5

Stainless Steel

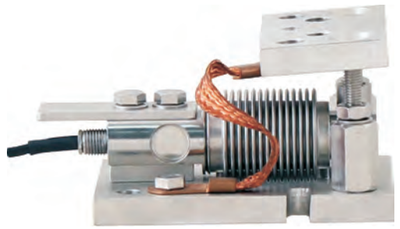

Features:

- Assembles: 563RS single ended beam load cell
- Material: Stainless steel
- Capacities: 5-200kg
- Self-checking with anti-lifting protection
- Multi-directional overloading isolation for the load cell
- Equipped with lateral stops

Load Cell Certifications:

RoHS

Load Cell Not Included.

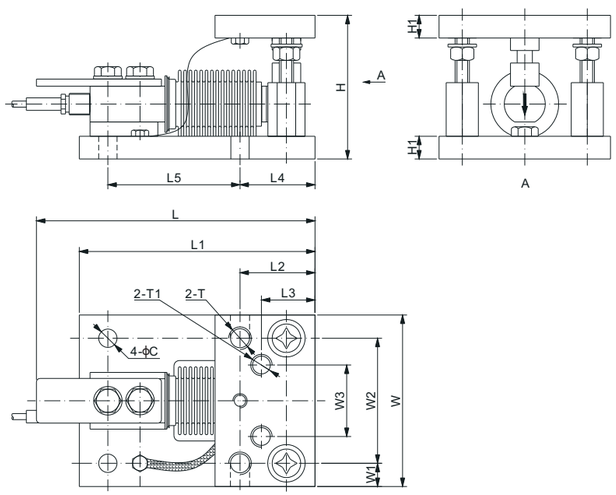

DIMENSIONS

LOAD CELL CAPACITY	C	H	H1	L	L1	L2	L3	L4	L5	W	W1	W2	W3	T	T1
kg/mm															
5-200	12.9	80.0	12.7	156.0	132.0	42.0	30.0	42.0	76.0	96.0	13.0	70.0	40.0	1/2-20 UNF	M12
lb/inches (conversion of above dimensions)															
11.02-440.92	0.51	3.15	0.50	6.14	5.20	1.65	1.18	1.65	2.99	3.78	0.51	2.76	1.57	1/2-20 UNF	M12

PART NUMBER

Load Cell Capacity	Part No.	Weight Approx. (kg)
5kg-200kg	563RSM5-(5-200)kg	2.04

INTERCHANGEABLE REFERENCE

Brand	Model
Rice Lake	1700HE

© 2025 ANYLOAD V1 dimensions and specifications subject to change without notice

MK4-563RSM5

Description:

The MK4-563RSM5 offers a stainless steel constructed washdown IP68/69K certified waterproof product. Ideal for chemical-and food-related applications, the kit provides outstanding performance in hostile environments, built to last in any messy situation. The OIML and NTEP approved load cells deliver accurate readings for lower capacities up to 500kg. Common applications include batching/blending and chemical/food processing. Two slots on the baseplate facilitate ease of use. Each kit comes with an IP67 water-resistant junction box and 65ft of cable.

Load Cell Certifications:

RoHS

PART NUMBER

Load Cell Capacity	Part No.	Weight Approx. (kg/lb)
10kg	MK4-563RSM5-10kg-S	12.0/26.5
20kg	MK4-563RSM5-20kg-S	12.0/26.5
50kg	MK4-563RSM5-50kg-S	12.0/26.5
100kg	MK4-563RSM5-100kg-S	12.0/26.5
200kg	MK4-563RSM5-200kg-S	12.0/26.5
500kg	MK4-563RSM5-500kg-S	12.0/26.5

Features:

- NTEP certified load cells from 5kg-500kg
- OIML certified load cells from 10kg-500kg
- CE, RoHS, and ExNepsi certified load cells
- IP68/IP69K certified waterproof construction
- Uplift protenction and overload protenction
- Conventional wiring and color code

Complete Set Includes:

- (4 pcs) Four 563RS Stainless Steel single-ended shear beam load cells
- (4 pcs) Four 563RSM5 Stainless Steel weigh modules
- (1 pcs) One J04SS water-resistant junction box
- (1 roll) 65ft (20m) cable, 4-wire PVC cable with both copper braid & foil shielding (CB4-5.1-20m)

© 2025 ANYLOAD V1 dimensions and specifications subject to change without notice

563YHM4-02

ANYLOAD

Alloy Steel

Load Cell Certifications:

Load Cell Not Included.

Features:

- Assembles: 563YH alloy steel shear beam load cell
- Capacities: 100lb-20Klb/100kg-10t
- Integral "Jacking" for easy load cell removal/installation
- Rocker pin design-allows for 360° thermal expansion
- Both uplift and overload protection with lateral stops
- Versatile mounting options for conventional tank/vessel leg
  - Able to use existing 4-square tank leg mount holes in floor
  - Free to rotate for fixed position 360° w/same 4-mount holes
  - Able to flip entire mount 180° for further mount options
- Side holes each side for shipping & installation brackets
- Flexible stainless steel braided grounding strap

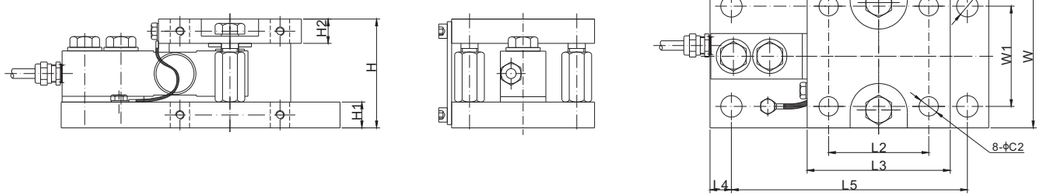

DIMENSIONS

LOAD CELL CAPACITY	C1	C2	H	H1	H2	L	L1	L2	L3	L4	L5	W	W1
lb/inches													
100–4,000;SE5,000	0.59	0.53	2.99	0.71	0.67	7.68	4.65	2.76	3.94	0.59	6.50	3.94	2.76
5,000–10,000	0.71	0.59	4.33	1.06	0.98	9.57	6.00	3.35	4.72	0.75	8.07	4.72	3.35
15,000–20,000	0.87	0.79	5.73	1.42	1.26	12.52	7.76	4.09	5.98	1.00	10.52	5.98	4.09
kg/mm													
100–2,000	15.0	13.5	76.0	18.0	17.0	195.0	118.0	70.0	100.0	15.0	165.1	100.0	70.0
3,000–5,000	18.0	15.0	110.0	27.0	25.0	243.0	152.5	85.0	120.0	19.0	205.0	120.0	85.0
10,000	22.0	20.0	145.5	36.0	32.0	318.0	197.0	104.0	152.0	25.4	267.2	152.0	104.0

SE refers to small envelope

PART NUMBER

Load Cell Capacity	Part No.	Weight Approx. (kg)
100lb-SE5Klb	563YHM4-(0.1-SE5)Klb-02	4.2
5Klb-10Klb	563YHM4-(5-10)Klb-02	9.8
15Klb-20Klb	563YHM4-(15-20)Klb-02	20.5
100kg-2t	563YHM4-(100kg-2t)-02	4.2
3t-5t	563YHM4-(3-5)t-02	9.8
10t	563YHM4-10t-02	20.5

© 2025 ANYLOAD V1 dimensions and specifications subject to change without notice

ANYLOAD

MK4-563YHM4

Description:

The MK4-563YHM4 weigh module kit features four best-selling 563YH true shear beam load cells and weigh modules, including home run cable and junction box. Our rocker pin-loading design provides ideal freedom for proper alignment and thermal expansion. Each weigh module is fully protected from both overload and uplift. This adaptable low-profile kit is ideal for saving installation time with four additional bolt holes in the bottom plate, thus matching the typical tank leg bolt pattern in the floor, for ease of installation. The weigh module kit is ideal for a wide range of weighing applications, including most outdoor tank and vessel weighing needs. Each kit comes with an IP67 water-resistant junction box and 65ft cable.

Load Cell Certifications:

Features:

- NTEP certified true shear beam load cells (from 250lb-20Klb & 200kg-5t)
- OIML certified true shear beam load cells (from 1Klb-20Klb & 500kg-10t)
- CE, RoHS, and ExNepsi certified load cells
- Uplift protection
- Allowance for thermal expansion
- Top plate mounts directly to vessel / tank leg
- Conventional wiring and color code

Complete Set Includes:

- (4 pcs) Four 563YH Alloy Steel single-ended true shear beam load cells
- (4 pcs) Four 563YHM4 Alloy Steel weigh modules
- (1 pcs) One J04SA-16 water-resistant junction box with GORE Breather Vent
- (1 roll) 65ft (20m) cable, 4-wire PVC cable with both copper braid & foil shielding (CB4-5.1-20m)

PART NUMBER

Load Cell Capacity	Part No.	Weight Approx. (kg/lb)
100lb	MK4-563YHM4-100lb-S	22.0/48.5
250lb	MK4-563YHM4-250lb-S	22.0/48.5
500lb	MK4-563YHM4-500lb-S	22.0/48.5
1Klb	MK4-563YHM4-1Klb-S	22.0/48.5
2Klb	MK4-563YHM4-2Klb-S	22.0/48.5
2.5Klb	MK4-563YHM4-2.5Klb-S	22.0/48.5
4Klb	MK4-563YHM4-4Klb-S	22.0/48.5
SE5Klb	MK4-563YHM4-SE5Klb-S	22.0/48.5
5Klb	MK4-563YHM4-5Klb-S	25.0/55.1
10Klb	MK4-563YHM4-10Klb-S	25.0/55.1

© 2025 ANYLOAD V1 dimensions and specifications subject to change without notice

563YHM2

Alloy Steel

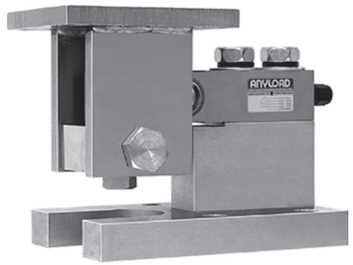

Features:

- Assembles: 563YH single ended beam load cell
- Capacities: 100lb-10Klb/100kg-5t
- Center pivoted and self-checking
- Tension load applied to the load cell is converted to compression load application for the weigh module

WEIGH MODULES

Load Cell Certifications:

Load Cell Not Included.

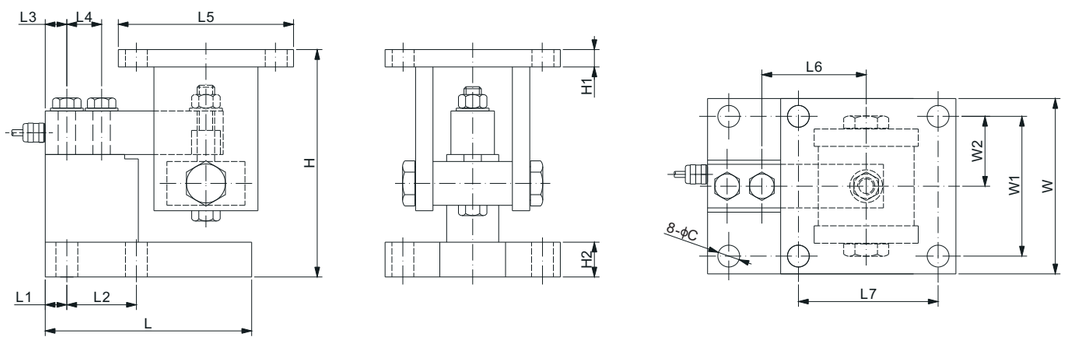

DIMENSIONS

LOAD CELL CAPACITY	C	$H_{Min/Max}$	H1	H2	L	L1	L2	L3	L4	L5	L6	L7	W	W1	W2
lb/inches															
100–4,000;SE5,000	0.63	6.50/6.69	0.50	1.00	5.98	0.67	2.00	0.62	1.00	5.04	3.00	4.02	5.04	4.02	2.01
5,000–10,000	0.63	6.50/6.69	0.50	1.00	7.76	1.06	2.99	0.75	1.50	5.04	3.75	4.02	5.04	4.02	2.01
kg/mm															
100–2,000	16.0	165.0/170.0	12.7	25.4	152.0	17.0	50.8	15.80	25.4	128.0	76.2	102.0	128.0	102.0	51.0
3,000–5,000	16.0	165.0/170.0	12.7	25.4	197.0	27.0	75.9	19.10	38.1	128.0	95.3	102.0	128.0	102.0	51.0

SE refers to small envelope

PART NUMBER

Load Cell Capacity	Part No.	Weight Approx. (kg)
100lb-SE5Klb	563YHM2-(0.1-SE5)Klb	9.1
5Klb-10Klb	563YHM2-(5-10)Klb	11.0
100kg-2t	563YHM2-(100kg-2t)	9.1
3t-5t	563YHM2-(3-5)t	11.0

INTERCHANGEABLE REFERENCE

Brand	Model
Rice Lake	RL1800*

** $H_{Min/Max}$ of RL1800 is 5.25/5.56 inch for 100lb to SE5Klb, 6.12/6.62 inch for 5Klb to 10Klb.*

www.anyload.com
© 2025 ANYLOAD V1 dimensions and specifications subject to change without notice

563YSM3-02

Stainless Steel

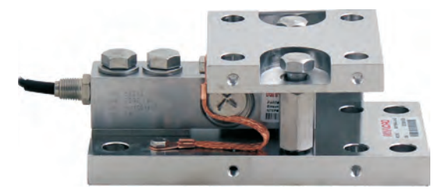

Features:

- Assembles: 563YS single ended beam load cell
- Capacities: 500lb-10Klb/250kg-5t
- Anti-lifting and overloading protection
- Rocker pin loading design
- Equipped with lateral stops

WEIGH MODULES

Load Cell Certifications:

Load Cell Not Included.

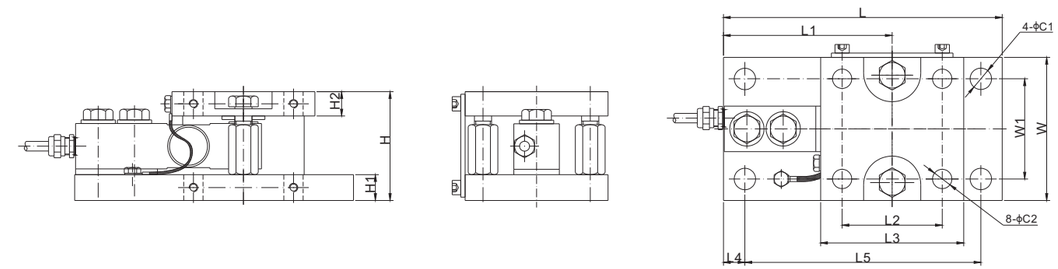

DIMENSIONS

LOAD CELL CAPACITY	C1	C2	H	H1	H2	L	L1	L2	L3	L4	L5	W	W1
lb/inches													
500–4,000;SE5,000	0.59	0.53	2.99	0.71	0.67	7.68	4.65	2.76	3.94	0.59	6.50	3.94	2.76
5,000–10,000	0.71	0.59	4.33	1.06	0.98	9.57	6.00	3.35	4.72	0.75	8.07	4.72	3.35
kg/mm													
250–2,000	15.0	13.5	76.0	18.0	17.0	195.0	118.0	70.0	100.0	15.0	165.1	100.0	70.0
3,000–5,000	18.0	15.0	110.0	27.0	25.0	243.0	152.5	85.0	120.0	19.0	205.0	120.0	85.0

PART NUMBER

Load Cell Capacity	Part No.	Weight Approx. (kg)
500lb-SE5Klb	563YSM3-(0.5-SE5)Klb-02	4.2
5Klb-10Klb	563YSM3-(5-10)Klb-02	9.5
250kg-2t	563YSM3-(250kg-2t)-02	4.2
3t-5t	563YSM3-(3-5)t-02	9.5

www.anyload.com
© 2025 ANYLOAD V1 dimensions and specifications subject to change without notice

535AHM2

Alloy Steel

Load Cell Certifications:

Features:

- Load cell and shackle integration
- High tensile anchor shackle meets ISO2415-2004 requirements
- Bobbin design provides high accuracy and repeatability

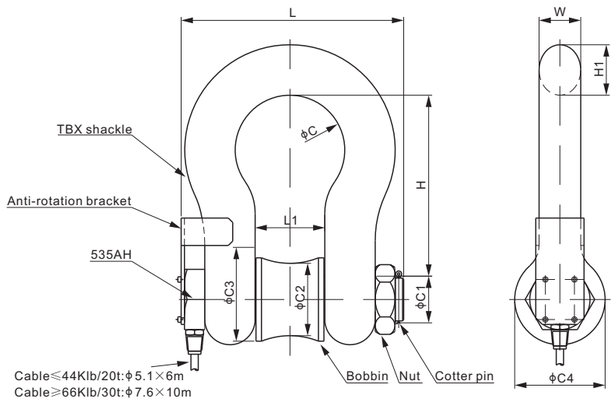

DIMENSIONS

LOAD CELL CAPACITY t/mm	C	C1	C2	C3	C4	H	H1	L	L1	W
5	43	20	30	34	38	60.5	17.5	101	27	16
10	58.5	30	45	50	60.5	95	27	146	43	25.5
15	74	33	50	55	68.5	108	32	160	46	29.5
20	92	39	58	65	84	133.5	38	186	57	36
30	98.5	42	63	70	92	146	41	205	60.5	39
50	146	60	90	100	122	197	61	295	82.5	53
100	200	85	128	142	165	330	92	436	127	76

SPECIFICATIONS

Full Scale Output	2.5 mV/V ± 5%	**Recommended Excitation**	10V (15V Maximum)
Zero Balance	< ± 0.02 mV/V	**Insulation Resistance**	>2 [50V DC] GΩ
Non-linearity	< ± 1%	**Nominal Temperature Range**	-10°C to 50°C / 14°F to 122°F
Repeatability	< ± 0.5%	**Safe Overload**	150% of full scale
Hysteresis Error	< ± 1%	**Breaking Overload**	300% of full scale
Creep in 30 min.	< ± 0.5%	**Seal Type / IP Rating**	Environmentally Sealed / IP67
Input Resistance	350Ω ± 10	**Cable Color Code**	Exc+ Red Exc- Black Sig+ Green Sig- White Shield Bare
Output Resistance	350Ω ± 3		
Element Material	Alloy steel		

PART NUMBER

Load Cell Capacity	Part No.	Weight Approx. (kg)
5t	535AHM2-5t	1.2
10t	535AHM2-10t	3.6
15t	535AHM2-15t	5.4
20t	535AHM2-20t	9.2
30t	535AHM2-30t	7.4
50t	535AHM2-50t	17.0
100t	535AHM2-100t	63.0

www.anyload.com
© 2025 ANYLOAD V1 dimensions and specifications subject to change without notice

AMPLIFIERS

Analogue Amplifier

Features:

- One input port, can connect directly to 1 x 350Ω load cell, or max 4 x 350Ω (or higher resistance) load cells through a junction box, or max 8 x 700Ω (or higher resistance) load cells through a junction box
- One output port, signal can be either 0...10 V or 4...20 mA

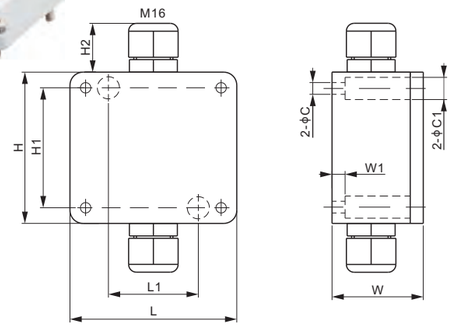

DIMENSIONS

	C	C1	H	H1	H2	L	L1	W	W1
mm	4.5	8.5	58	46	18	64	34.5	35	5
inches	0.2	0.3	2.3	1.8	0.7	2.5	1.4	1.4	0.2

SPECIFICATIONS

Load Cell Type		All strain gage type
Weight (G), approx.	kg/lb	0.17 / 0.37
Power Supply	V DC	24 ± 10%
Input Range	mV	0 - 30
Max. Power Voltage	DC	30V, 2.5A
Output Signal (Zero adjustable ±20%)	V DC	0 - 10
	mA	4 - 20
Max. Output Current	mA	40
Max. Input Offset Voltage	μV	50
Min. Common-mode Rejection Ratio (G=10)	dB	100
Protection Class		IP66
Enclosure Material		Aluminum casting
Excitation voltage to load cell	V DC	12
Tare Limit	°C / °F	Shall not exceed 30% of full load
Operating temperature range		-10 - 50 / 14 - 122
Linearity	ppm/°C	≤ 0.02%
Voltage Full Scale Temperature Drift	ppm/°C	50
Current Full Scale Temperature Drift		60

PART NUMBER

Part No.	*Compatibility with Balluff's IO-LINK Modules	Weight Approx. (kg)
A1A-22	No	0.17
A1A-22B	Yes	0.17

** compatible models of IO-Link of Balluff's:*
- BNI IOL-709-000-K006
- BNI IOL-710-000-K006
-BNI IOL-712-000-K023
-BNI IOL-714-000-K023
Set up note:
A1A-22B → Analogue to IO-LINK module → IO-LINK device

CONNECTION DIAGRAM

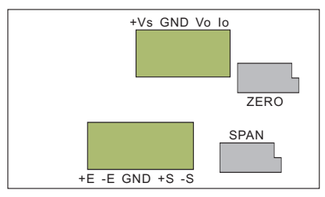

© 2025 ANYLOAD V1 dimensions and specifications subject to change without notice

Digital Amplifier, Aluminum Enclosure

Features:

- Small volume and enable to mount inside of load cell
- One input port, can connect directly to 1 x 350Ω load cell, or max 4 x 350Ω (or higher resistance) load cells through a junction box
- 24-bit A/D Converter, high speed processor
- Internal digital filter and strong anti-interference ability
- Contains ability for 9 point linear calibration
- Applied to all kinds of strain gauge bridge-type load cell, such as , tension, compression, torque and so on

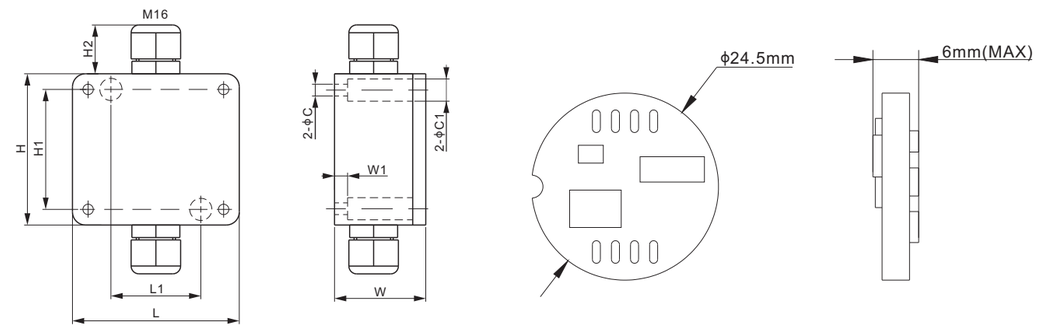

DIMENSIONS

	C	C1	H	H1	H2	L	L1	W	W1
mm	4.5	8.5	58	46	18	64	34.5	35	5
inches	0.2	0.3	2.3	1.8	0.7	2.5	1.4	1.4	0.2

SPECIFICATIONS

Load Cell Type		All strain gage type
Power Supply	V DC	6~24
Input range	mV/V	0.8~3.9
Output signal		RS232/RS485
Communication protocol		MODBUS
Resolution		>1000000
Temperature Coefficient		better than 100ppm
Operating temperature range	°C / °F	-30 - 80 / -22 - 176
Excitation voltage to load cell	V	5

PART NUMBER

Digit board ONLY

Part No.	Interface	Weight Approx. (kg)
DGB-DM2507	RS232	0.02
DGB-DM2508	RS485	0.02

With aluminum enclosure

Part No.	Interface	Weight Approx. (kg)
A1A-D2507	RS232	0.15
A1A-D2508	RS485	0.15

CONNECTION DIAGRAM

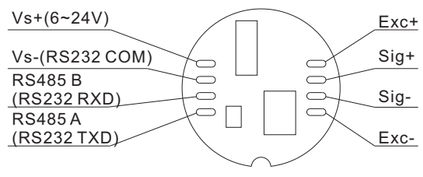

© 2025 ANYLOAD V1 dimensions and specifications subject to change without notice

A2A

Analogue Amplifier

Features:

- Compact size with strong aluminum casting
- Can drive up to 8 x350Ω load cells
- Can be connected directly to 1 or 2 load cells or connected to several load cells through a junction box
- Preinstalled GORE® breather vent
- Capative stainless steel screws (attached to the cover)

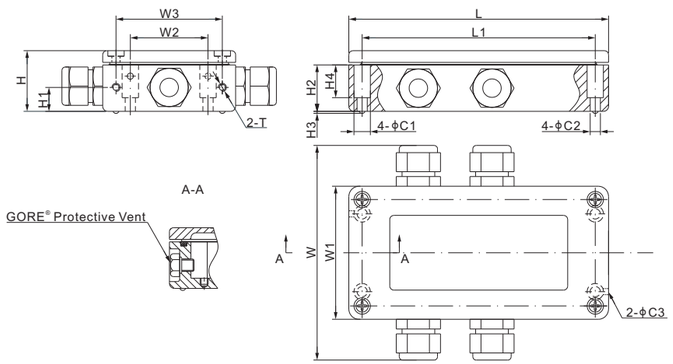

DIMENSIONS

	C1	C2	C3	H	H1	H2	H3	H4	L	L1	W	W1	W2	W3	T
mm	8.0	5.0	3.0	29	11.7	22.7	1.0	16	127	114	102	65	38	52	M4 Depth7
inches	0.31	0.2	0.12	1.14	0.46	0.89	0.04	0.63	5.0	4.49	4.02	2.56	1.5	2.05	M4 Depth0.28

SPECIFICATIONS

Load Cell Type		All strain gage type	**Linearity**		≤ 0.02%
Power Supply	V DC	24 ± 20%	**Max. Input Offset Voltage**	μV	50
Input Range	mV	0 ± 36	**Min. Common-mode Rejection Ratio (G=10)**	dB	100
Max. Power	W	4.35			
Output Signal	V	0 - 10 / 0 ± 10	**IP Rating**		IP66
	mA	4 - 20 (Adjustable ±20%)	**Enclosure Material**		Aluminum casting
Voltage Full Scale Temperature Drift	ppm/°C	80	**Excitation voltage to load cell**	V	5 or 12
			Tare Limit		Shall not exceed 30% of full load
Current Full Scale Temperature Drift	ppm/°C	100	**Operating temperature range**	°C / °F	-10 - 50 / 14 - 122

PART NUMBER

Part No.	Shipping Weight Approx. (kg)
A2A-D2	0.5

CONNECTION DIAGRAM

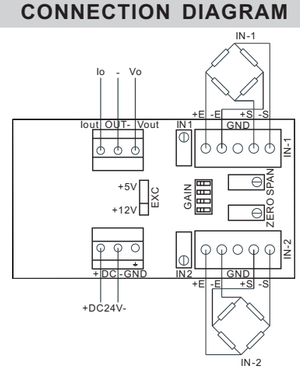

© 2025 ANYLOAD V1 dimensions and specifications subject to change without notice

AMPLIFIERS

A2P

Analogue Amplifier

Features:

- High & low temperature accuracy and high stability
- Can be connected directly to 1or 2 load cells or connected up to 8 x350Ω load cells through a junction box
- Support multiple magnification range, two types of excitation voltage available
- Anti-EFT (Electrical Fast Transient pulses) interference & anti-radiation interference

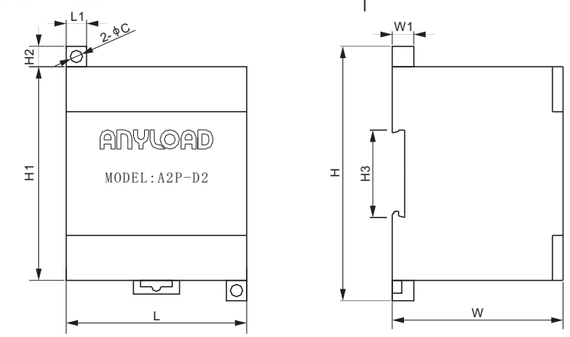

DIMENSIONS

	C	H	H1	H2	H3	L	L1	W	W1
mm	4.8	100	84	8	35	71	8	67.2	8.5
inches	0.2	3.9	3.3	0.3	1.4	2.8	0.3	2.6	0.3

SPECIFICATIONS

Load Cell Type		All strain gage type	**Linearity**		≤ 0.02%
Power Supply	V DC	24	**Max. Input Offset Voltage**	μV	50
Input Range	mV	0 ± 36	**Min. Common-mode Rejection Ratio (G=10)**	dB	100
Max. Power	W	4.35			
Output Signal	V	0 ± 10	**Installation**		Standard rail channel (Indoor)
	mA	4-20	**Enclosure Material**		PVC casting
Voltage Full Scale Temperature Drift	ppm/°C	50	**Excitation voltage to load cell**	V	5 or 12
			Tare Limit		Shall not exceed 30% of full load
Current Full Scale Temperature Drift	ppm/°C	80	**Operating temperature range**	°C / °F	-10 - 50 / 14 - 122

PART NUMBER

Part No.	*Compatibility with Balluff's IO-LINK Modules	Weight Approx. (kg)
A2P-D2	No	0.2
A2P-D2B	Yes	0.2

** compatible models of IO-Link of Balluff's:*
- BNI IOL-709-000-K006
- BNI IOL-710-000-K006
-BNI IOL-712-000-K023
-BNI IOL-714-000-K023
Set up note:
A2P-D2B → Analogue to IO-LINK module → IO-LINK device

CONNECTION DIAGRAM

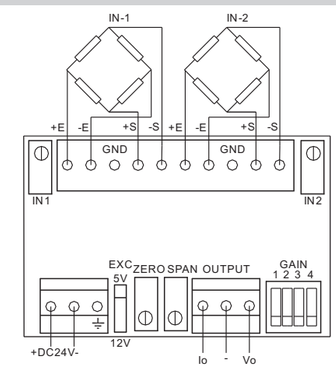

© 2025 ANYLOAD V1 dimensions and specifications subject to change without notice

AMPLIFIERS

JUNCTION BOXES

ANYLOAD

ANYLOAD

J02S-23-MB

Main Board of Junction Box

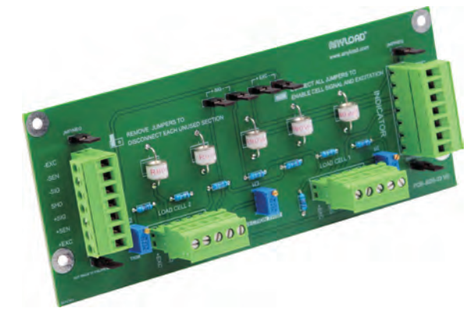

Features:

- PCB Mounting holes and outline dimensions match as an analog conversion for Fairbanks Intalogix, compatible with existing boxes and hardware
- 2-Channel Analog Signal Trim PCB
- Removable Connectors-for quick check of load cell integrity
- Both Individual Load Cell Trim and Section Trim
- Lighting/Overvoltage Protection
- Jumpers to Turn Off Power to Unused Channels
- Expansion provision to Extend to additional J-Boxes
- Load cell shielding passes through PCB to Indicator

Benefits:

- Allows operator to manage as complete analog scale
- Saves time and effort by eliminating the need to extend load cell cables or install new junction boxes

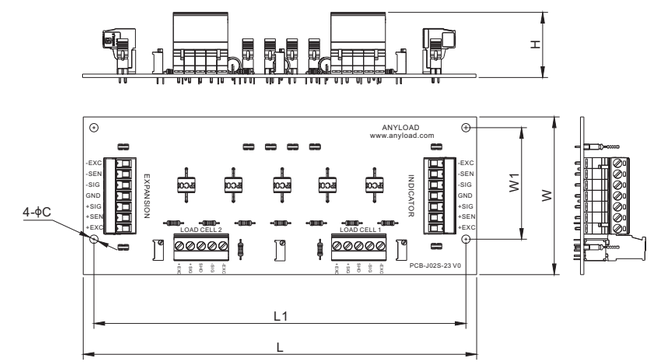

DIMENSIONS

	C	H	L	L1	W	W1
mm	3.9	30.0	183.5	173.5	73.5	52.0
inches	0.15	1.18	7.22	6.83	2.89	2.05

SPECIFICATIONS

Number of Cells	2 single cells	**Trimming**	Section or individual cell trim, with signal trim

TRIMMING RANGE

Load Cell Resistance	Signal Trim
350Ω	3.6% of output
700Ω	6.3% of output
1000Ω	7.0% of output

PART NUMBER

Trimming	Section Trim	Lightning Protection	Part No.	Weight Approx. (kg)
Signal	Yes	Yes	J02S-23-MB	0.3

MOTHERBOARD LAYOUT

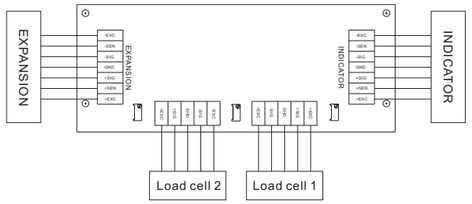

© 2025 ANYLOAD V1 dimensions and specifications subject to change without notice

J04EA-16; J04SA-16

ANYLOAD

Aluminum

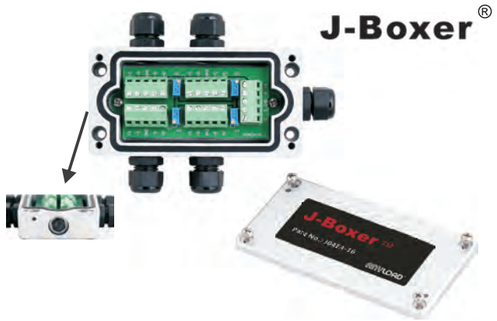

Features:

- Compact size with strong aluminum casting
- Number of cells: 2 - 4 single cells
- Trimming: Individual cell with excitation or signal trim
- Preinstalled GORE® breather vent
- Equipped with independent potentiometers
- Captive stainless steel screws (attached to the cover)
- IP Rating: IP67

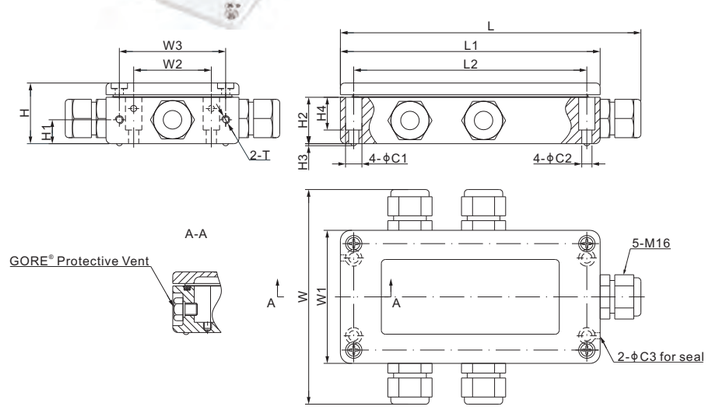

DIMENSIONS

	C1	C2	C3	H	H1	H2	H3	H4	L	L1	L2	W	W1	W2	W3	T
mm	8.0	5.0	3.0	29	11.7	22.7	1.0	16	151	127	114	112	65	38	52	M4 Depth7
inches	0.31	0.2	0.12	1.14	0.46	0.89	0.04	0.63	5.94	5.0	4.49	4.41	2.56	1.5	2.05	M4 Depth0.28

SPECIFICATIONS

Number of Cells	2 - 4 single cells	**Trimming**	Individual cell with excitation or signal trim
Input Cable Fittings	M16: 4mm - 8mm diameter cable	**Enclosure Material**	Aluminum casting
Output Cable Fittings	M16: 4mm - 8mm diameter cable	**IP Rating**	IP67

TRIMMING RANGE

Load Cell Resistance	Signal Trim	Excitation Trim
350Ω	3.6% of output	2.3% of output
700Ω	6.3% of output	1.3% of output
1000Ω	7.0% of output	1.0% of output

PART NUMBER*

Trimming	Part No.	Weight Approx. (kg)
Excitation Trim	J04EA-16	0.5
Signal Trim	J04SA-16	0.5

Excitation trim is "more forgiving" for trimming non-calibrated rated output due to having wider range of effect on load cell calibration.

MOTHERBOARD LAYOUT

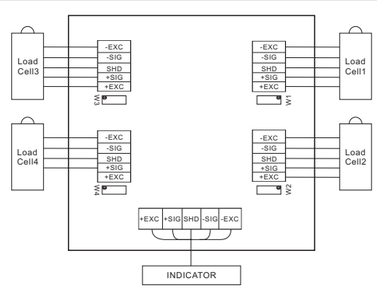

* ATEX, FM, IECEx approved versions carry the "-Ex" suffix.

© 2025 ANYLOAD V1 dimensions and specifications subject to change without notice

ANYLOAD

J04ES; J04SS

Stainless Steel

Features:

- Enclosure Material: Stainless steel SS304
- Number of cells: 2 - 4 single cells
- Trimming: Individual cell with excitation or signal trim
- Equipped with independent potentiometers
- Captive stainless steel screws
- IP Rating: IP65

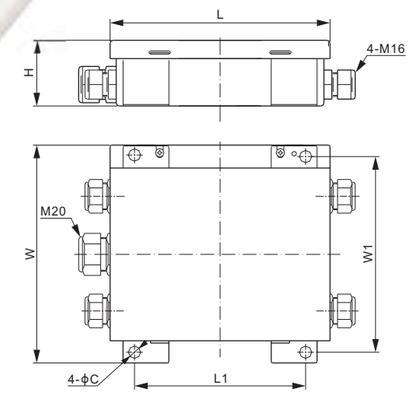

DIMENSIONS

	C	H	L	L1	W	W1
mm	8	44	144	112	142	128
inches	0.3	1.7	5.7	4.4	5.6	5.0

SPECIFICATIONS

Number of Cells	2 - 4 single cells	**Trimming**	Individual cell with excitation or signal trim
Input Cable Fittings	M16: 4mm - 8mm diameter cable	**Enclosure Material**	Stainless steel SS304
Output Cable Fittings	M20: 5mm - 9mm diameter cable	**IP Rating**	IP65

TRIMMING RANGE

Load Cell Resistance	Signal Trim	Excitation Trim
350Ω	3.6% of output	2.3% of output
700Ω	6.3% of output	1.3% of output
1000Ω	7.0% of output	1.0% of output

PART NUMBER*

Trimming	Lightning Protection	Part No.	Weight Approx. (kg)
Excitation	No	J04ES	0.7
Signal	No	J04SS	0.7
Excitation	Yes	J04ES-II	0.7
Signal	Yes	J04SS-II	0.7

MOTHERBOARD LAYOUT

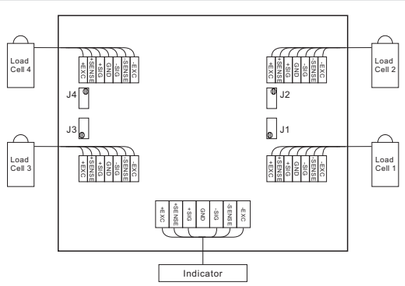

* ATEX, FM, IECEx approved versions carry the "-Ex" suffix.

© 2025 ANYLOAD V1 dimensions and specifications subject to change without notice

J04ES-E; J04SS-E

Stainless Steel

Features:

- Expansion port (for wiring additional junction boxes to allow more load cells to be connected)
- Lightning protection
- Enclosure Material: Stainless steel SS304
- Number of cells: 2 - 4 single cells
- Trimming: Individual cell with excitation or signal trim
- Equipped with independent adjustable resistors
- Captive stainless steel screws
- IP Rating: IP65

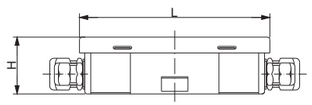

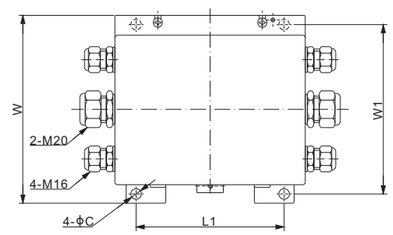

DIMENSIONS

	C	H	L	L1	W	W1
mm	8	44	144	112	142	128
inches	0.3	1.7	5.7	4.4	5.6	5.0

SPECIFICATIONS

Number of Cells	2 - 4 single cells	**Trimming**	Individual cell with excitation or signal trim
Input Cable Fittings	M16: 4mm - 8mm diameter cable	**Enclosure Material**	Stainless steel SS304
Output Cable Fittings	M20: 5mm - 9mm diameter cable	**IP Rating**	IP65

TRIMMING RANGE

Load Cell Resistance	Signal Trim	Excitation Trim
350Ω	3.6% of output	2.3% of output
700Ω	6.3% of output	1.3% of output
1000Ω	7.0% of output	1.0% of output

PART NUMBER*

Trimming	Breather	Part No.	Weight Approx. (kg)
Signal	No	J04SS-E	0.7
Excitation	No	J04ES-E	0.7
Signal	Yes	J04SS-E-B	0.7
Excitation	Yes	J04ES-E-B	0.7

* ATEX, FM, IECEx approved versions carry the "-Ex" suffix.

MOTHERBOARD LAYOUT

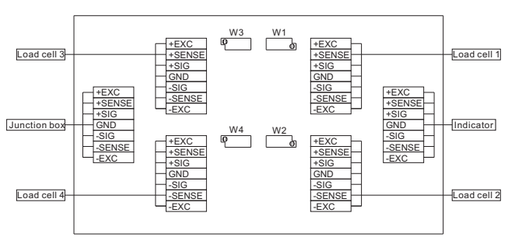

www.anyload.com
© 2025 ANYLOAD V1 dimensions and specifications subject to change without notice

J04ES-FS; J04SS-FS

Stainless Steel

Features:

- Enclosure Material: Stainless steel casting
- Number of cells: 2 - 4 single cells
- Trimming: Individual cell with excitation or signal trim
- Equipped with independent potentiometers
- Captive stainless steel screws
- IP Rating: IP65

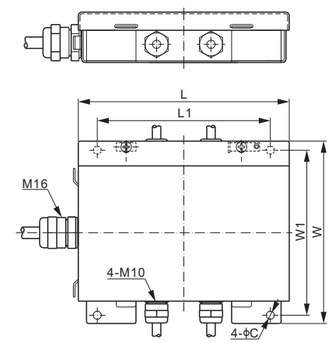

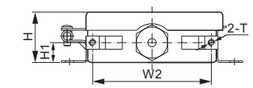

DIMENSIONS

	C	H	H1	L	L1	W	W1	W2	T
mm	5.0	31.0	12.0	128	105	110.5	100	72	M4
inches	0.2	1.2	0.5	5.0	4.1	4.4	3.9	2.8	M4

SPECIFICATIONS

Number of Cells	2 - 4 single cells	**Trimming**	Individual cell with excitation or signal trim
Input Cable Fittings	M10: 3mm - 6.2mm diameter cable	**Enclosure Material**	Stainless steel casting
Output Cable Fittings	M16: 4mm - 8mm diameter cable	**IP Rating**	IP65

TRIMMING RANGE

Load Cell Resistance	Signal Trim	Excitation Trim
350Ω	3.6% of output	2.3% of output
700Ω	6.3% of output	1.3% of output
1000Ω	7.0% of output	1.0% of output

PART NUMBER*

Trimming	Part No.	Weight Approx. (kg)
Excitation Trim	J04ES-FS	0.5
Signal Trim	J04SS-FS	0.5

* ATEX, FM, IECEx approved versions carry the "-Ex" suffix.

MOTHERBOARD LAYOUT

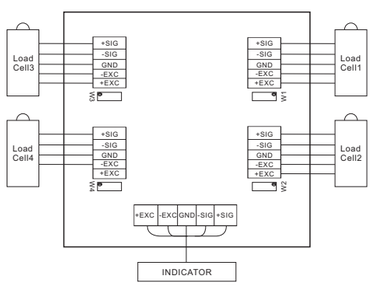

www.anyload.com
© 2025 ANYLOAD V1 dimensions and specifications subject to change without notice

J04EP-E; J04SP-E

Fiberglass Reinforced Polyester

Features:

- Fiberglass reinforced polyester housing
- Quick removable load cell connectors
- Section and individual load cell trim pots
- Lightning/Over voltage protection
- Preinstalled GORE breather vent
- Conformal coated circuit board
- Number of load cells: 2-4 single cells
- Expansion port to/for additional J-Box
- IP rating: IP67
- Load cell shielding remains separate from earth ground terminal
- Load cell shielding is ideally intended to run from the load cell, through the junction box, into to the indicator where the shielding is ultimately grounded via the instrumentation power ground

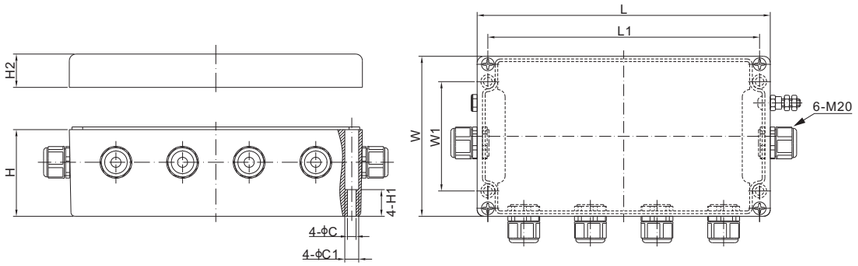

DIMENSIONS

	C	C1	H	H1	H2	L	L1	W	W1
mm	6.5	10.5	65.0	20.0	25.5	220.0	204.0	120.0	82.0
inches	0.26	0.41	2.56	0.79	1.00	8.66	8.03	4.72	3.23

SPECIFICATIONS

Number of Cells	2 -4 single cells	**Trimming**	Section or individual cell trim, with excitation or signal trim
Input Cable Fittings	M20: 6mm - 12mm diameter cable		
Output Cable Fittings	M20: 6mm - 12mm diameter cable	**Enclosure Material**	Fiberglass Reinforced Polyester
		IP Rating	IP67

TRIMMING RANGE

Load Cell Resistance	Signal Trim	Excitation Trim
350Ω	3.6% of output	5.4% of output
700Ω	6.3% of output	2.7% of output
1000Ω	8.0% of output	1.9% of output

PART NUMBER

Trimming	Section Trim	Lightning Protection	Part No.	Weight Approx. (kg)
Excitation	Yes	Yes	J04EP-E-D2	1.5
Signal	Yes	Yes	J04SP-E-D2	1.5

MOTHERBOARD LAYOUT

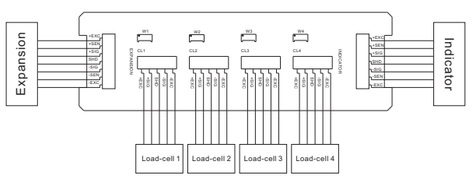

© 2025 ANYLOAD V1 dimensions and specifications subject to change without notice

J06ES; J06SS

Stainless Steel

Features:

- Enclosure Material: Stainless steel SS304
- Number of cell connections: 2 - 6 single cells
- Trimming: Individual cell with excitation or signal trim
- Equipped with independent potentiometers
- Captive stainless steel screws
- IP Rating: IP65

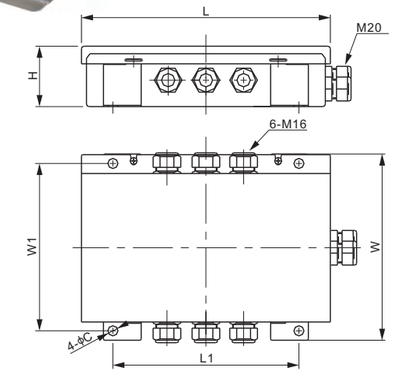

DIMENSIONS

	C	H	L	L1	W	W1
mm	8	43	200	147	149	135
inches	0.3	1.7	7.9	5.8	5.9	5.3

SPECIFICATIONS

Number of Cells	2 - 6 single cells	**Trimming**	Individual cell with excitation or signal trim
Input Cable Fittings	M16: 4mm - 8mm diameter cable	**Enclosure Material**	Stainless steel SS304
Output Cable Fittings	M20: 5mm - 9mm diameter cable	**IP Rating**	IP65

TRIMMING RANGE

Load Cell Resistance	Signal Trim	Excitation Trim
350Ω	3.6% of output	2.3% of output
700Ω	6.3% of output	1.3% of output
1000Ω	7.0% of output	1.0% of output

PART NUMBER*

Trimming	Lightning Protection	Part No.	Weight Approx. (kg)
Excitation	No	J06ES	0.9
Signal	No	J06SS	0.9
Excitation	Yes	J06ES-II	0.9
Signal	Yes	J06SS-II	0.9

* ATEX, FM, IECEx approved versions carry the "-Ex" suffix.

MOTHERBOARD LAYOUT

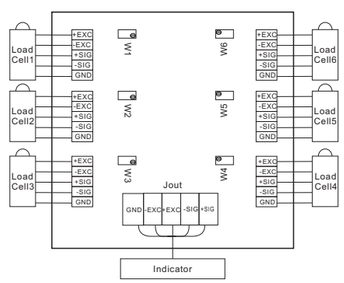

© 2025 ANYLOAD V1 dimensions and specifications subject to change without notice

J06S-E-21-MB

Main Board of Junction Box

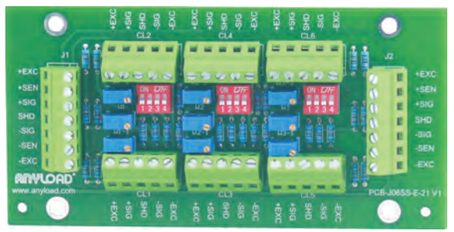

Features:

- Switchable On/Off power per channel
- Section and individual load cell trim pots
- Conformal coated circuit board
- Number of load cells: 2-6 single cells
- Expansion port to/for additional J-Box

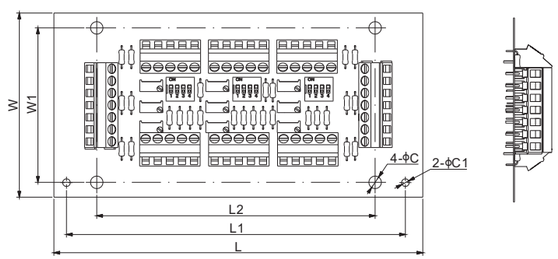

DIMENSIONS

	C	C1	H	L	L1	L2	W	W1
mm	5.2	3.2	16.0	152.4	140.0	115.0	76.0	63.75
inches	0.20	0.13	0.63	6.00	5.51	4.53	2.99	2.51

SPECIFICATIONS

Number of Cells	2 -6 single cells	**Trimming**	Section or individual cell trim, with signal trim

TRIMMING RANGE

Load Cell Resistance	Signal Trim
350Ω	3.6% of output
700Ω	6.3% of output
1000Ω	7.0% of output

PART NUMBER

Trimming	Section Trim	Lightning Protection	Part No.	Weight Approx. (kg)
Signal	Yes	Yes	J06S-E-21-MB	0.3

MOTHERBOARD LAYOUT

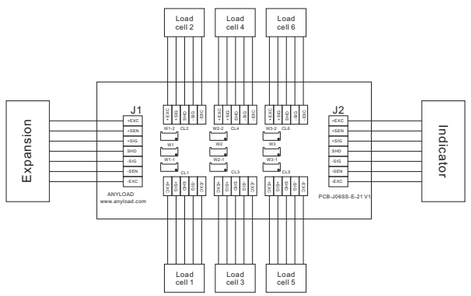

www.anyload.com
© 2025 ANYLOAD V1 dimensions and specifications subject to change without notice

J08ES; J08SS

Stainless Steel

Features:

- Enclosure Material: Stainless steel SS304
- Number of cells: 2 - 8 single cells
- Trimming: Section or individual cell trim, with excitation or signal trim
- Equipped with independent potentiometers
- Captive stainless steel screws
- IP Rating: IP65

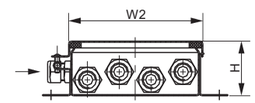

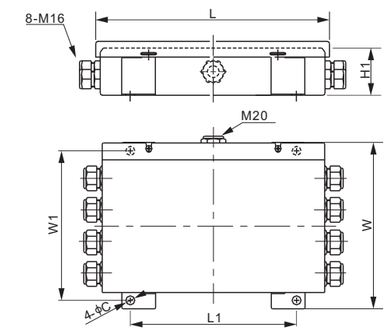

DIMENSIONS

	C	H	H1	L	L1	W	W1	W2
mm	8	43	40	200	147	147	134	119
inches	0.3	1.7	1.6	7.9	5.8	5.8	5.3	4.7

SPECIFICATIONS

Number of Cells	2 - 8 single cells	**Trimming**	Section or individual cell trim, with excitation or signal trim
Input Cable Fittings	M16: 4mm - 8mm diameter cable		
Output Cable Fittings	M20: 5mm - 9mm diameter cable	**Enclosure Material**	Stainless steel SS304
		IP Rating	IP65

TRIMMING RANGE

Load Cell Resistance	Signal Trim	Excitation Trim
350Ω	3.6% of output	2.3% of output
700Ω	6.3% of output	1.3% of output
1000Ω	7.0% of output	1.0% of output

PART NUMBER*

Trimming	Section Trim	Lightning Protection	Part No.	Weight Approx. (kg)
Excitation	Yes	No	J08ES	1.0
Signal	Yes	No	J08SS	1.0
Excitation	No	No	J08ES-I	1.0
Signal	No	No	J08SS-I	1.0
Excitation	No	Yes	J08ES-II	1.0
Signal	No	Yes	J08SS-II	1.0
Excitation	Yes	Yes	J08ES-III	1.0
Signal	Yes	Yes	J08SS-III	1.0

* ATEX, FM, IECEx approved versions carry the "-Ex" suffix.

MOTHERBOARD LAYOUT

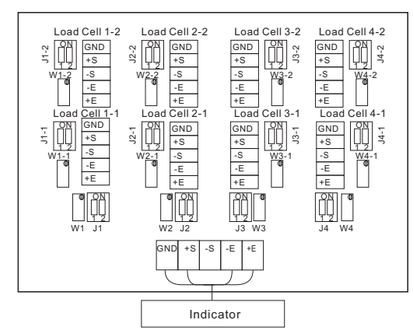

www.anyload.com
© 2025 ANYLOAD V1 dimensions and specifications subject to change without notice

J08EP-E; J08SP-E

ANYLOAD

Fiberglass Reinforced Polyester

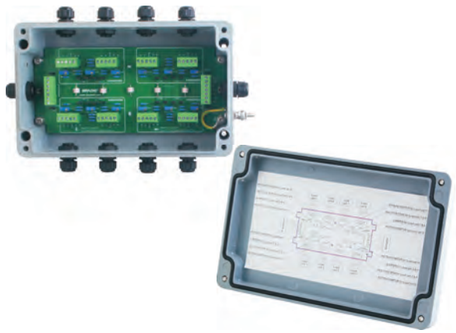

Features:

- Fiberglass reinforced polyester housing
- Quick removable load cell connectors
- Switchable On/Off power per channel
- Section and individual load cell trim pots
- Lightning/Over voltage protection
- Preinstalled GORE breather vent
- Conformal coated circuit board
- Number of load cells: 2-8 single cells
- Expansion port to/for additional J-Box
- IP rating: IP67
- Load cell shielding remains separate from earth ground terminal
- Load cell shielding is ideally intended to run from the load cell, through the junction box, into to the indicator where the shielding is ultimately grounded via the instrumentation power ground

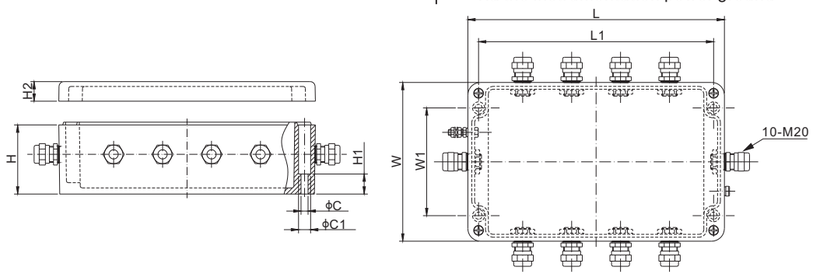

DIMENSIONS

	C	C1	H	H1	H2	L	L1	W	W1
mm	7.2	12.3	70.5	20.5	20	262	240	162	110
inches	0.3	0.5	2.8	0.8	0.8	10.3	9.4	6.4	4.3

SPECIFICATIONS

Number of Cells	2 - 8 single cells
Input Cable Fittings	M20: 6mm - 12mm diameter cable
Output Cable Fittings	M20: 6mm - 12mm diameter cable
Trimming	Section or individual cell trim, with excitation or signal trim
Enclosure Material	Fiberglass Reinforced Polyester
IP Rating	IP67

SCHEMATIC DIAGRAM

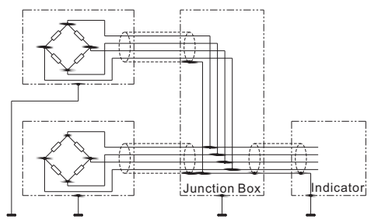

TRIMMING RANGE

Load Cell Resistance	Signal Trim	Excitation Trim
350Ω	3.6% of output	5.4% of output
700Ω	6.3% of output	2.7% of output
1000Ω	8.0% of output	1.9% of output

MOTHERBOARD LAYOUT

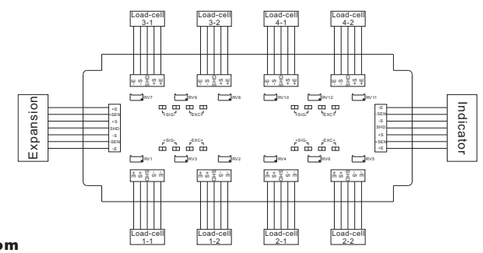

PART NUMBER

Trimming	Section Trim	Lightning Protection	Part No.	Weight Approx. (kg)
Excitation	Yes	Yes	J08EP-E-03B	2.5
Signal	Yes	Yes	J08SP-E-03B	2.5

© 2025 ANYLOAD V1 dimensions and specifications subject to change without notice

ANYLOAD

J12ES; J12SS

Stainless Steel

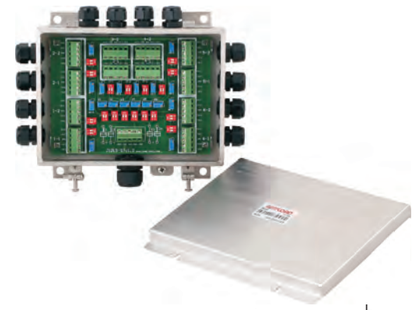

Features:

- Enclosure Material: Stainless steel SS304
- Number of cells: 2 - 12 single cells
- Trimming: Section or individual cell trim, with excitation or signal trim
- Equipped with independent potentiometers
- Captive stainless steel screws
- IP Rating: IP65

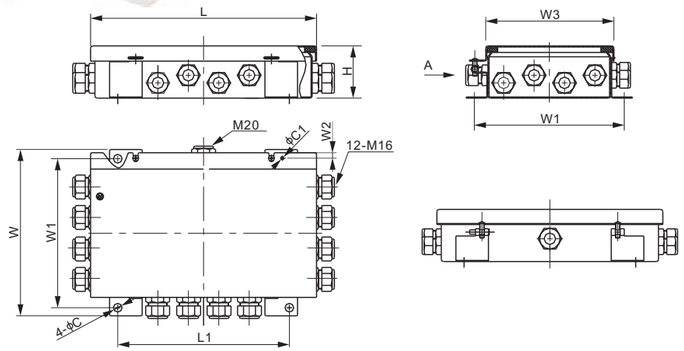

DIMENSIONS

	C	C1	H	L	L1	W	W1	W2	W3
mm	8	3	47	200	150	174	159	3.5	150
inches	0.3	0.1	1.8	7.9	5.9	6.9	6.3	0.1	5.9

SPECIFICATIONS

Number of Cells	2 - 12 single cells	Trimming	Section or individual cell trim, with excitation or signal trim
Input Cable Fittings	M16: 4mm - 8mm diameter cable		
Output Cable Fittings	M20: 5mm - 9mm diameter cable	Enclosure Material	Stainless steel SS304
		IP Rating	IP65

TRIMMING RANGE

Load Cell Resistance	Signal Trim	Excitation Trim
350Ω	3.6% of output	2.3% of output
700Ω	6.3% of output	1.3% of output
1000Ω	7.0% of output	1.0% of output

MOTHERBOARD LAYOUT

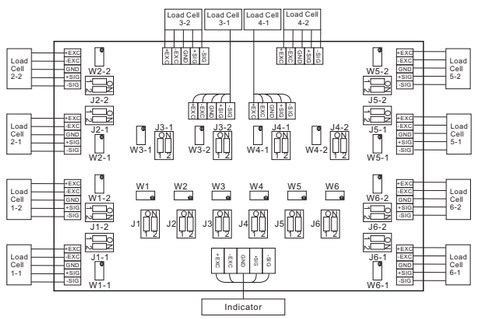

PART NUMBER*

Trimming	Section Trim	Lightning Protection	Part No.	Weight Approx. (kg)
Excitation	Yes	No	J12ES	1.1
Signal	Yes	No	J12SS	1.1
Excitation	No	No	J12ES-I	1.1
Signal	No	No	J12SS-I	1.1
Excitation	No	Yes	J12ES-II	1.1
Signal	No	Yes	J12SS-II	1.1
Excitation	Yes	Yes	J12ES-III	1.1
Signal	Yes	Yes	J12SS-III	1.1

* ATEX, FM, IECEx approved versions carry the "-Ex" suffix.

© 2025 ANYLOAD V1 dimensions and specifications subject to change without notice

INDICATORS & REMOTE DISPLAYS

ANYLOAD

808AH

Remote Display, 5” Standard Model

Bottom view

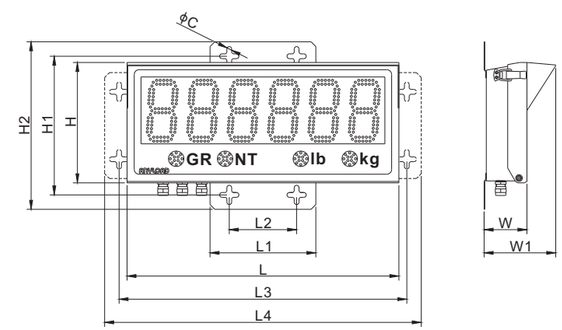

Features:

Great Visibility:
- Double-row discrete LED
- 6 digits, 5”height, 7 segment
- Wide viewing 120° angle
- Auto brightness adjustment
- Mirror display
- Grey front safety glass

Auto-Learn Technology:
- Automatically detect indicator string protocols
- Automatically set communication baud rates

Multiport Communication:
- Input: independent RS232, RS422, RS485, 20mA current loop (active or passive)
- Output: echo out and addressable multi display configuration
- Switch inputs and relay output to control traffic lights
- Lightning ESD protection for communication lines

Service Friendly:
- Modular design
- External membrane keypad
- Hinged front cover
- Pivoting internal electronics plates
- Onboard diagnostic lights for trouble shooting
- 100~240VAC internal encapsulated UL/CSA power supply

Rugged Enclosure:
- Weather proof powder coated mild steel enclosure
- Visor to protect from sun or rain shade
- Wall & Pole mount kit
- GORE® breather vent

DIMENSIONS

	C	H	H1	H2	L	L1	L2	L3	L4	W	W1
mm	10	250	288	348	565	220	140	598	658	89	149
inches	0.4	9.8	11.3	13.7	22.2	8.7	5.5	23.5	25.9	3.5	5.9

SPECIFICATIONS

Enclosure Material	Powder Coated Mild Steel(IP65)	**Power Supply**	100-240VAC, 1.2A, 50/ 60Hz, UL approved
Display	6-digit, 7-segment, 125mm(5”) LEDs	**Operating Temp.**	-40°C to 50°C (-40°F to 120°F)
Display Visibility	Max 75m(250ft) @1500mcd, 120° angle	**Box Ventilation**	Breather vent to avoid condensation
Status Indication	4 annunciators for GR, NT, lb and kg	**Input & Output**	2 dry contact switches and 1 form C relay
Communication	Independent RS232, RS422 / 485, 20mA 300, 600,..., 9600, ..., 38400, 57600 Baud	**Dimensions**	565mm X 250mm X 89mm 22.2” X 9.8” X 3.5”

PART NUMBER

Part No.	Plug Type	Annumciators	Weight Approx. (kg)
808AH651-02	Type B	GR, NT, lb, kg	9.0
808AH651-02RCC	Type I	GR, NT, kg, t	9.0
808AH651-02RF	Type F	GR, NT, kg, t	9.0

© 2025 ANYLOAD V1 dimensions and specifications subject to change without notice

808BH

ANYLOAD

Remote Display, 5” with Built-in Traffic Light

Bottom view

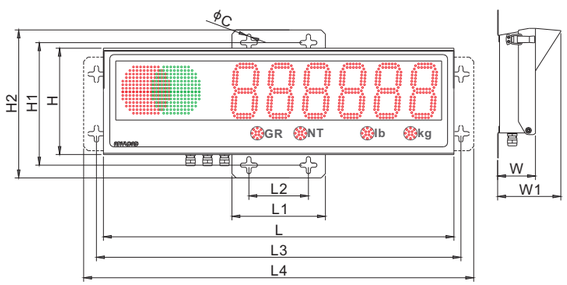

Features:

Great Visibility:
- Built-in 6 RED/GREEN light balls
- Double-row discrete LED
- 6 digits, 5”height, 7 segment
- Wide viewing 120° angle
- Auto brightness adjustment
- Mirror display

RED / GREEN Lane Control:
- Using two manual input switches in solid or blinking modes
- Using several pre-installed soft ware utility programs
- Using serial ASCII commands sent by programmable indicators

Auto-Learn Technology:
- Automatically detect indicator string protocols
- Automatically set communication baud rates

Multiport Communication:
- Input: independent RS232, RS422, RS485, 20mA current loop (active or passive)
- Output: echo out and addressable multi display configuration

Service Friendly:
- Modular design
- External membrane keypad
- Hinged front cover
- Pivoting internal electronics plates

Rugged Enclosure:
- Weather proof design
- Visor to protect from sun or rain shade
- Wall & Pole mount kit
- GORE® breather vent

DIMENSIONS

	C	H	H1	H2	L	L1	L2	L3	L4	W	W1
mm	10	250	288	348	825	220	140	858	918	89	149
inches	0.4	9.8	11.3	13.7	32.5	8.7	5.5	33.8	36.1	3.5	5.9

SPECIFICATIONS

Enclosure Material	Powder Coated Mild Steel(IP65)	**Power Supply**	100-240VAC, 1.2A, 50/ 60Hz, UL approved
Display	6-digit, 7-segment, 125mm(5”) LEDs	**Operating Temp.**	-40°C to 50°C (-40°F to 120°F)
Display Visibility	Max 75m(250ft) @1500mcd, 120° angle	**Box Ventilation**	2 Breather vent to avoid condensation
Status Indication	4 annunciators for GR, NT, lb and kg	**Input & Output**	2 dry contact switches and 1 form C relay
Communication	Independent RS232, RS422 / 485, 20mA 300, 600,..., 9600, ..., 38400, 57600 Baud	**Dimensions**	825mm X 250mm X 89mm 32.5” X 9.8” X 3.5”

PART NUMBER

Part No.	Plug Type	Annumciators	Weight Approx. (kg)
808BH651-02	Type B	GR, NT, lb, kg	14.0
808BH651-02RCC	Type I	GR, NT, kg, t	14.0

www.anyload.com
© 2025 ANYLOAD V1 dimensions and specifications subject to change without notice

ANYLOAD

808CH

Remote Display, 2.5” Compact Model

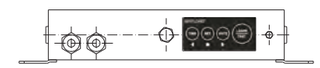

Bottom view

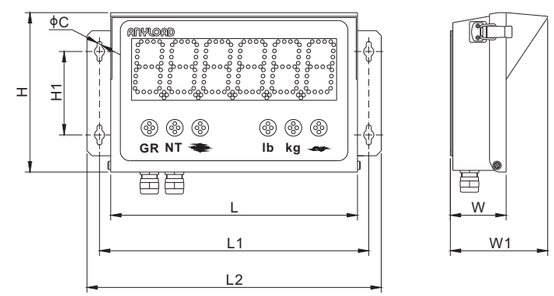

Features:

Great Visibility:
- Single-row discrete LED
- 6 digits, 2.5”height, 7 segment
- Wide viewing 120° angle
- Two levels brightness adjustment
- Mirror display
- Grey front safety glass

Auto-Learn Technology:
- Automatically detect indicator string protocols
- Automatically set communication baud rates

Multiport Communication:
- Input: independent RS232, RS422, RS485, 20mA current loop (active or passive)
- Output: echo out and addressable multi display configuration
- Switch inputs and relay output to control traffic lights
- Lightning ESD protection for communication lines

Service Friendly:
- Modular design
- External membrane keypad
- Menu driven setup function
- Hinged front cover
- Onboard diagnostic lights for trouble shooting
- 100~240VAC internal encapsulated UL/CSA power supply

Rugged Enclosure:
- Weather proof powder coated mild steel enclosure
- Visor to protect from sun or rain shade
- Wall mounting on the back
- GORE® breather vent

DIMENSIONS

	C	H	H1	L	L1	L2	W	W1
mm	6.0	191.0	100.0	296.0	323.0	353.0	67.0	116.8
inches	0.24	7.52	3.94	11.65	12.72	13.90	2.64	4.60

SPECIFICATIONS

Enclosure Material	Powder Coated Mild Steel(IP65)	**Power Supply**	100-240VAC, 1.1A, 50/ 60Hz, UL approved
Display	6-digit, 7-segment, 65mm(2.5”) LEDs	**Operating Temp.**	-40°C to 50°C (-40°F to 120°F)
Display Visibility	Max 25m(100ft) @1500mcd, 120° angle	**Box Ventilation**	Breather vent to avoid condensation
Status Indication	2 annunciators for Motion and Zero	**Input & Output**	2 dry contact switches and 1 form C relay
Communication	Independent RS232, RS422 / 485, 20mA 300, 600,..., 9600, ..., 38400, 57600 Baud	**Dimensions**	296mm X 191mm X 67mm 11.65” X 7.52” X 2.64”

PART NUMBER

Part No.	Plug Type	Annumciators	Weight Approx. (kg)
808CH631-02	Type B	GR, NT, lb, kg	6.4
808CH631-02RCC	Type I	GR, NT, kg, t	6.4

www.anyload.com
© 2025 ANYLOAD V1 dimensions and specifications subject to change without notice

805BS

ANYLOAD

Stainless Steel

Measurement Canada

Keyboard Configuration

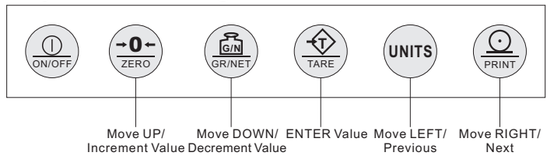

Features:

- NTEP III/IIIL, 10 000 approved
- Measurement Canada III, 10 000; III HD 20 000
- Material: Stainless steel
- IP Rating: IP66
- LCD 6-digit display
- Power Supply: External AC adaptor or rechargeable lithium batteries 7.4V/4000mA
- Parameter and calibration settings are performed on the front panel
- Units of Measurement: kg, lb, g, oz, lb:oz conversion
- Improper operation and fault indication
- Two way relay signal output
- Programmable print format
- Built-in clock
- Functions: Auto zero scale, Auto zero tracking, PEAK, COUNTING, ZERO SCALE, TARE, GROSS/NET, Print interface

General Specifications

Enclosure Material	Stainless Steel
Units of Measurement	kg, lb, g, oz, lb:oz conversion
Working Humidity	≤90% RH
Working Temperature	-10℃ to 40℃ / 14℉ to 104℉
Dimensions	226mm×76mm×181mm
	8.9in×3.0in×7.13in
Display Type	LCD
Display Digits	6 digits
Digit Height	25.4mm / 1in
Display Dimensions	143mm×41mm / 5.6in×1.6in
Power Supply	AC adaptor or rechargeable lithium batteries
	7.4V/4000mA
IP Rating	IP66

Technical Specifications

Division	1; 2; 5; 10
Tare range	100% Full Scale
Max. Number of load cells	8×350Ω; 16×700Ω
Max. power consumption	10W
Excitation Voltage	5V DC±5%
Resetable fuse	1.1A
Communicate interface	RS-232
Print interface	Serial interface
Input Range	Up to 20mV
Update Rate	20ms or 50Hz

PART NUMBER

Part No.	Enclosure	Interface	Weight Approx. (kg)
805BS-B-19	Stainless steel 304	RS-232 & RS-485	2.3
805BS-TN-B	Stainless steel 201	RS-232 only	2.3

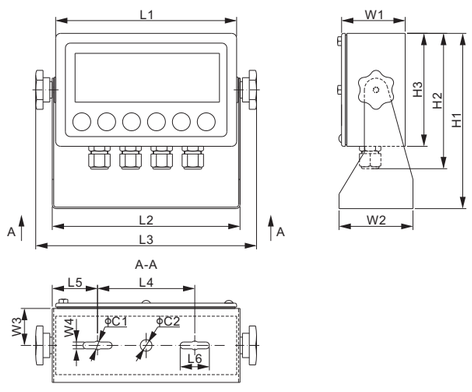

DIMENSIONS

	C1	C2	H1	H2	H3	L1	L2	L3	L4	L5	L6	W1	W2	W3	W4
inches	0.4	0.5	7.1	5.5	4.6	7.3	7.6	8.9	3.9	1.8	1.2	2.6	3.0	1.5	0.3
mm	9	12	181	139	116	186	193	226	100	46.5	30	65	76	38	7

www.anyload.com
© 2025 ANYLOAD V1 dimensions and specifications subject to change without notice

ANYLOAD

805TS

Stainless Steel SS304

Measurement Canada

Keyboard Configuration

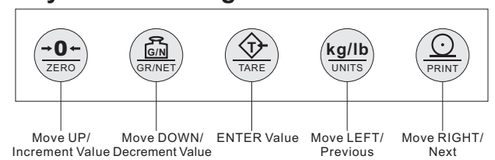

Features:

- NTEP III/IIIL, 10 000 approved
- Measurement Canada III, 10 000; III HD 20 000
- Enclosure: Stainless steel SS304
- IP Rating: IP66
- LED 6-digit display
- Power Supply: External AC adaptor, 110VAC+10%/-15% or 220VAC+10%/-15%, 50-60Hz
- Front panel calibration and configuration
- Units of Measurement: kg, lb
- Indication of improper operation and fault
- Two way relay signal output
- Equipped with RS-232 and RS-485 connecting ports
- Print functions with programmable print format
- Built-in clock
- Functions: Auto zero scale, Auto zero tracking, PEAK, COUNT, Zero Scale, TARE, GROSS/NET

General Specifications

Enclosure Material	Stainless Steel SS304
Units of Measurement	kg, lb
Working Humidity	≤90% RH
Working Temperature	-10℃ to 40℃ / 14℉ to 104℉
Dimensions	226mm×76mm×181mm
	8.9in×3.0in×7.13in
Display Type	LED
Display Digits	6 digits
Digit Height	20.3mm / 0.8in
Display Dimensions	143mm×41mm / 5.6in×1.6in
Power Supply	AC adaptor, 110VAC+10%/-15% or
	220VAC+10%/-15%, 50-60Hz
IP Rating	IP66

Technical Specifications

Division	1; 2; 5; 10
Tare range	100% Full Scale
Max. Number of load cells	8×350Ω; 16×700Ω
Max. power consumption	10W
Excitation Voltage	5V DC±5%
Resetable fuse	1.1A
Communicate interface	RS-232C, RS-485
Input Range	Up to 20mV
Update Rate	20ms or 50Hz
Print interface	Serial interface, contact with printer

PART NUMBER

Part No.	Transformer	Weight Approx. (kg)
805TS-B-19A	External	2.3
805TS-B-19B	Internal	2.3

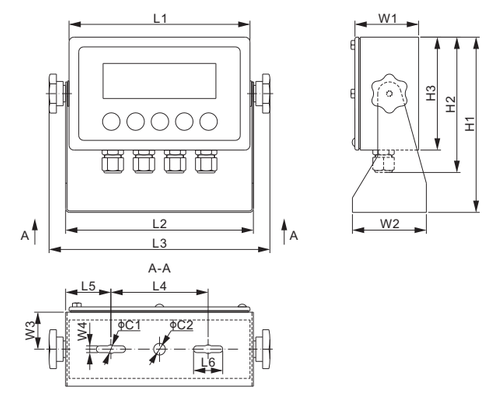

DIMENSIONS

	C1	C2	H1	H2	H3	L1	L2	L3	L4	L5	L6	W1	W2	W3	W4
inches	0.4	0.5	7.1	5.5	4.6	7.3	7.6	8.9	3.9	1.8	1.2	2.6	3.0	1.5	0.3
mm	9	12	181	139	116	186	193	226	100	46.5	30	65	76	38	7

www.anyload.com
© 2025 ANYLOAD V1 dimensions and specifications subject to change without notice

815BS

ANYLOAD

LCD Industrial Weight Indicator

Measurement Canada

Features:

- 1.0", 6 digits, 7 segments, LCD display
- Tri color backlight: green, red and amber
- Indication of up to four units of measurments: kg, lb, oz and g
- Indication of gross, net and tare
- Indication of stability and centre of zero
- Easy wiring screw terminals
- Weight, peak, set point, and piece counting
- Password protected setup and calibration menu
- Physical and electronic sealing with audit trail function
- Advance analogue, average and digital filtering
- Two independent RS232 communication ports
- UL approved external wall adapter
- Built in lithium battery with internal charger
- Weatherproof stainless steel enclosure, NEMA4X / IP66
- Breather vent to avoid condensation inside

Keyboard Configuration

Approvals:

- NTEP: Class III/IIIL 10,000d
- Measurement Canada: Class III / IIIHD 10,000d / 20,000d

Specifications

Power Supply	AC adaptor, 100VAC to 240VAC, 50-60Hz
	Built-in 10,000mAH internal rechargeable lithium battery
Power Consumption	120VAC @ 0.1A / 12VDC @ 0.5A (10W AC / 5W DC) typical
Excitation Voltage	5V DC ± 5%
Number of load cells	Up to 4x350Ω; 8x700Ω
Input Range	Up to 19mV/4mV/V
Sample Rate	80samples/second
Resolution	1,000,000 internal count, with 24bits resolution
Division	legal for trade 10,000d/20,000d
Tare range	100% Full Scale NTEP/MC/OIML
Communicate interface	2 x RS-232C
Working Humidity	20% RH to 90% RH
Working Temperature	-10°C to 50°C / 15°F to 120°F
Dimensions (W x H x D)	9.1"×7.4"×3.0"(231×196×76mm) base included

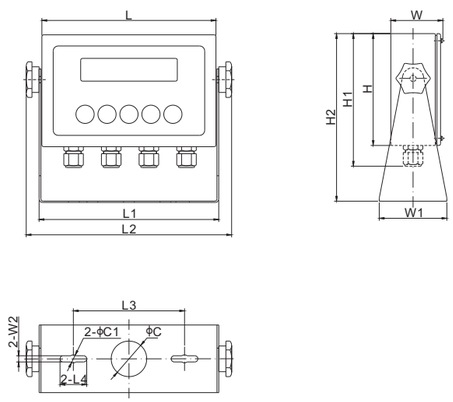

DIMENSIONS

L	7.7in (196mm)	H	4.9in (125mm)	W	2.3in (58mm)
L1	8.0in (202mm)	H1	5.9in (149mm)	W1	3.0in (76mm)
L2	9.1in (231mm)	H2	7.4in (188mm)	W2	0.3in (7mm)
L3	4.9in (125mm)	C	1.6in (40mm)		
L4	1.2in (30mm)	C1	0.4in (9mm)		

PART NUMBER

Part No.	Power Supply	Weight Approx. (kg)
815BS-B-21E	External	2.5

www.anyload.com
© 2025 ANYLOAD V1 dimensions and specifications subject to change without notice

ANYLOAD

815TS

LED Industrial Weight Indicator

Measurement Canada

Features:

- 0.8", 6 digits, 7 segments, LED display
- Indication of up to four units of measurements: kg, lb, oz and g
- Indication of gross, net and tare
- Indication of stability and centre of zero
- Easy wiring screw terminals
- Weight, peak, set point, and piece counting
- Password protected calibration menu
- Physical and electronic sealing via audit trail function
- Two set point output relays
- Advance analogue, digital and average filtering
- Two independent RS232 serial communication ports
- One independent RS485 serial communication port
- Weather proof stainless steel enclosure, NEMA4X / IP66
- Breather vent to avoid condensation inside

Keyboard Configuration

Approvals:

- NTEP: Class III/IIIL 10,000d
- Measurement Canada: Class III / IIIHD 10,000d / 20,000d

Specifications

Power Supply	UL approved internal, 100VAC to 240VAC, 50-60Hz
Power Consumption	120VAC @ 0.1A / 12VDC @ 0.5A (10W AC / 5W DC) typical
Excitation Voltage	5V DC ± 5%
Number of load cells	Up to 8x350Ω; 16x700Ω
Input Range	Up to 19mV/4mV/V
Sample Rate	80 samples/second
Resolution	1,000,000 internal count, with 24bits resolution
Division	legal for trade 10,000d/20,000d
Tare range	100% Full Scale NTEP/MC/OIML
Communicate interface	2 x RS-232C, 1 x RS-485
Output	2 x form C Relays
Working Humidity	20% RH to 90% RH
Working Temperature	-10°C to 50°C / 15°F to 120°F
Dimensions (W x H x D)	9.1"×7.4"×3.0"(231×188×76mm) base included

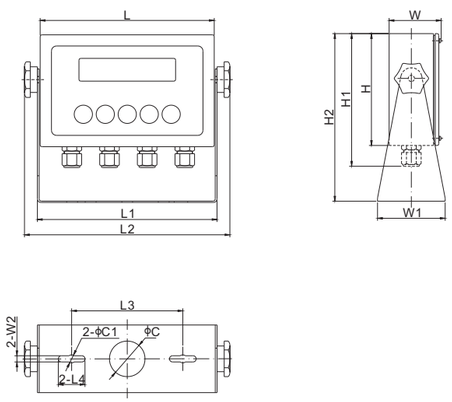

DIMENSIONS

L	7.7in (196mm)	H	4.9in (125mm)	W	2.3in (58mm)
L1	8.0in (202mm)	H1	5.9in (149mm)	W1	3.0in (76mm)
L2	9.1in (231mm)	H2	7.4in (188mm)	W2	0.3in (7mm)
L3	4.9in (125mm)	C	1.6in (40mm)		
L4	1.2in (30mm)	C1	0.4in (9mm)		

PART NUMBER

Part No.	Power Supply	Weight Approx. (kg)
815TS-B-21E	Internal	2.3

www.anyload.com
© 2025 ANYLOAD V1 dimensions and specifications subject to change without notice

805HP

ANYLOAD

ABS

Features:

- Exceptionally long battery life, up to 1600 hours on 3-AA batteries
- LED backlight and panoramic FSTN LCD view angle
- Material: ABS
- IP Rating: IP65
- LCD 6-digit display with LED backlight
- Non-volatile memory for reliable data saving
- Units of Measurement: kg, g, t, lb,Klb, N, kN, oz, user-defined unit
- Configurable 2 set-points for precaution and warning
- User-selectable display interval
- Overloading recording
- 10 user-selectable analog-to-digital converting frequency
- Weight calibration and digital calibration
- User-selectable auto power-off and power-saving timing
- Functions: Auto-Zero-Tracking, Auto-Zero, Manual-Zero, Hold, Peak-Hold, TARE

Keyboard Configuration

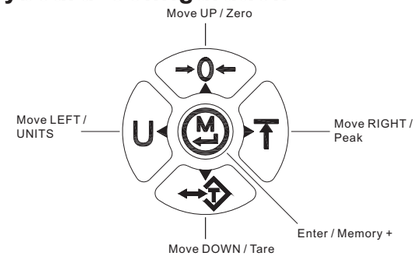

General Specifications	
Enclosure Material	ABS
Units of Measurement	kg, g, t, lb,Klb, N, kN, oz, user-defined unit
Working Humidity	≤90% RH
Working Temperature	-20°C to 70°C / -4°F to 158°F
Dimensions	170mm×98mm×34mm
	6.7in×3.9in×1.34in
Display Type	LCD
Display Digits	6 digits
Digit Height	16.8mm / 0.66in
Display Dimensions	72mm×27mm / 2.8in×1.1in
Power Supply	3×AA Alkaline Batteries
IP Rating	IP65

Technical Specifications	
Division	0.001; 0.002; 0.005; 0.01; 0.02; 0.05; 0.1; 0.2; 0.5; 1; 2; 5; 10; 20; 50
Tare range	100% Full Scale
Max. Number of load cells	8×350Ω; 32×1000Ω
Max. Power Consumption	5mW
Communication interface	None. RS-232 can be added upon request.

PART NUMBER

Part No.	Communication Interface	Weight (kg)
805HP-01	None, 1 connector for load cell only	0.54
805HP-02	RS232(1connector for RS232, 1 for load cell)	0.54
805HP-03	None, 2 connectors both for connecting load cells	0.54

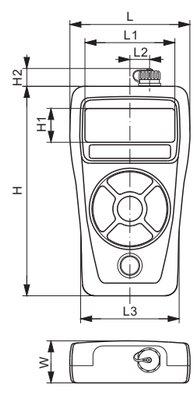

DIMENSIONS

	H	H1	H2	L	L1	L2	L3	W
inches	6.7	1.1	0.5	3.9	2.8	0.6	3.2	1.3
mm	170	27	13	98	72	15	80	34

www.anyload.com
© 2025 ANYLOAD V1 dimensions and specifications subject to change without notice

ANYLOAD

805HP-WL

ABS; Wireless Weighing Indicator

Features:

- Fully charged battery works for 100 hours
- Material: ABS
- IP Rating: IP65
- LCD 6-digit display with LED backlight
- Non-volatile memory for reliable data saving
- Units of Measurement: kg, g, t, lb,Klb, N, kN, oz, user-defined unit
- Configurable 2 set-points for precaution and warning
- User-selectable display interval
- Overloading recording
- 10 user-selectable analog-to-digital converting frequency
- Weight calibration and digital calibration
- User-selectable auto power-off and power-saving timing
- Functions: Auto-Zero-Tracking, Auto-Zero, Manual-Zero, Hold, Peak-Hold, TARE

Keyboard Configuration

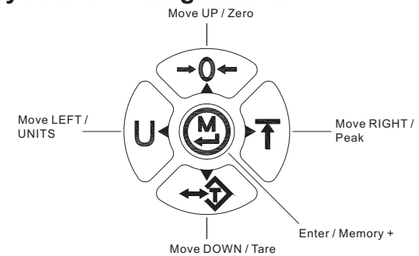

General Specifications	
Enclosure Material	ABS
Units of Measurement	kg, g, t, lb,Klb, N, kN, oz, user-defined unit
Working Humidity	≤90% RH
Working Temperature	-20°C to 70°C / -4°F to 158°F
Dimensions	170mm×98mm×34mm
	6.7in×3.9in×1.34in
Display Type	LCD
Display Digits	6 digits
Digit Height	16.8mm / 0.66in
Display Dimensions	72mm×27mm / 2.8in×1.1in
Power Supply	3×AA Alkaline batteries
IP Rating	IP65

Technical Specifications	
Division	0.001; 0.002; 0.005; 0.01; 0.02; 0.05; 0.1; 0.2; 0.5; 1; 2; 5; 10; 20; 50
Tare range	100% Full Scale
Min. Power Consumption	1.26mW
Max. Power Consumption	6.25mW
Wireless Distance	Up to 30m at lowest power set up and up to 75m at highest power set up (no obstructions)

PART NUMBER

Part No.	Communication Interface	Weight (kg)
805HP-01-WL01	805HP, no RS232, 433 frequency	0.36
805HP-01-WL02	805HP, no RS232, 915 frequency	0.36
805HP-02-WL01	805HP, yes RS232, 433 frequency	0.36
805HP-02-WL02	805HP, yes RS232, 915 frequency	0.36

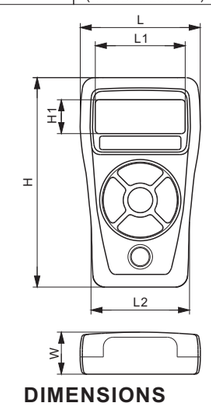

DIMENSIONS

	H	H1	L	L1	L2	W
inches	6.7	1.1	3.9	2.8	3.2	1.3
mm	170	27	98	72	80	34

www.anyload.com
© 2025 ANYLOAD V1 dimensions and specifications subject to change without notice

OTHER INSTRUMENTS

ANYLOAD

Lightning Arrester, Stainless Steel

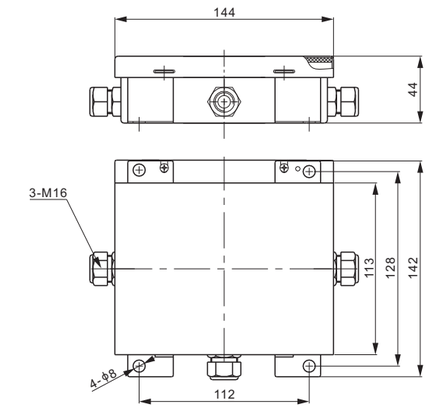

SPECIFICATIONS			
Item Code	LA2	**DC Spark-over Voltage(100V/s)**	90±25%V DC
Nominal Impulse Discharge Current	10kA (8/20μs)	**Impulse Spark-over Voltage(1kV/μs)**	≤700V
Single Impulse Discharge Current	20kA (8/20μs)	**Insulation Resistance**	≥10(100V DC)GΩ
AC Discharge Current(50Hz)	10A	**IP Rating**	IP66

DESCRIPTION:

ANYLOAD lightning arresters are designed to protect electrical devices from lightning and voltage strikes by safely blocking or diverting transient surges. Equipped with gas discharge tubes, the tubes are activated if a voltage strike is greater than 90 VAV and protect electrical devices by diverting voltage spikes to ground. The LA2 lightning arrester has a ground wire that is connected to the stainless steel enclosure and must be firmly grounded for the system protection to work.

PART NUMBER

Part No.	Weight Approx. (kg)
LA2	0.8

CIRCUIT DIAGRAM

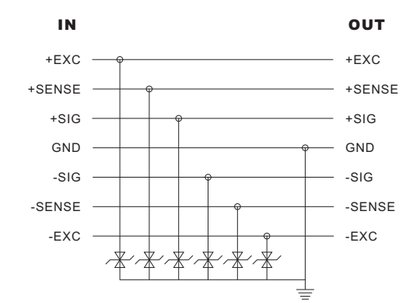

© 2025 ANYLOAD V1 dimensions and specifications subject to change without notice

TMA-108B

Aluminum, Compression Test Mount

Load Cell Certifications:

Load cell included.

Features:

- For indicators, remote displays, printers, computers, PLC, etc.
- Aluminum single point load cell with a aluminum mount
- Capacities: 6kg, 20kg (other capacities available upon request)
- CE, RoHS, Ex, OIML MAA, NTEP approved for load cells
- Four points overloading protection and anti-lifting protection

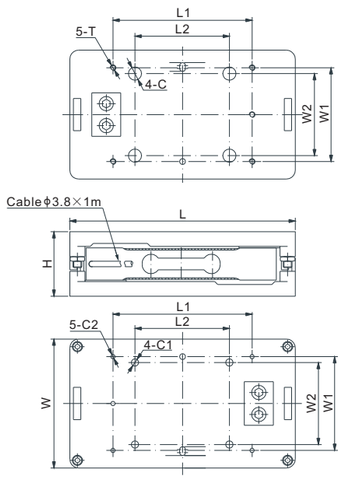

DIMENSIONS

RATED CAPACITY	C	C1	C2	H	L	L1	L2	W	W1	W2	T
kg/mm											
3~30	9.0	5.0	3.0	44.0	154.0	95.0	64.5	88.0	64.0	56.0	M4 Depth8.0
lb/inches (conversion of above dimensions)											
6.61~66.14	0.35	0.20	0.12	1.73	6.06	3.74	2.54	3.46	2.52	2.20	M4 Depth0.31

PART NUMBER

Rated Capacity	Part No.	Weight Approx. (kg)
6kg	TMA-108BA-6kg	0.8
20kg	TMA-108BA-20kg	0.8

AVAILABLE OPTIONS

- Capacity of 3kg, 7kg, 10kg, 15kg and 30kg available (produced upon request)
- 6 wire cable available

www.anyload.com
© 2025 ANYLOAD V1 dimensions and specifications subject to change without notice

WL900

Wireless RF Transmitter / Receiver

Features:

- Designed exclusively for weighing industry
- Easily connecting weight indicators to remote displays
- Auto-Learn technology for automatic communication settings
- Stainless steel NEMA4 enclosure for indoor and outdoor use
- Keypad and display for easy setup and configuration
- Screw terminal wiring and strain reliefs for data inputs
- Lightning ESD protection on communication lines
- AC wall adaptor with detachable connector
- Wall mounting on the back
- GORE® breather vent
- Universal world wide emission approval
- Independent RS232/ RS485/ 20mA communication ports
- Universal worldwide emission approvals: FCC, IC, C-Tick

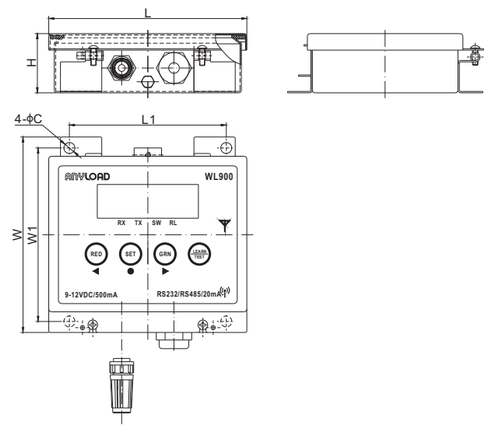

DIMENSIONS

	C	H	L	L1	W	W1
mm	8	44	144	112	142	128
inches	0.3	1.7	5.7	4.4	5.6	5.0

SPECIFICATIONS

Indoor / Urban Range	100m (300ft)	**Enclosure Material**	Stainless Steel (IP65)
Outdoor / Line of sight	300m (1000ft)	**External Adaptor**	100-240VAC, 0.6A, 50/60Hz, UL approved
Frequency Range	900MHz or 920MHz or 2.4GHz	**Power Supply**	9-12VDC, 500mA
Output Power	250mW (24dBM)	**Operating Temp**	-40°C to 50°C / -40°F to 122°F
Throughput	10Kbps (9600bps)	**Box Ventilation**	Breather vent to avoid condensation
Antenna	Whip RPSMA	**Input & output**	1 dry contact switch and 1 form C relay
Approvals	FCC, IC, C-Tick	**Status Indication**	Annunciators for TX and RX
Communications	RS232, RS485, 20mA (300, ..., 9600, ..., 57600baud)	**Dimensions**	44mm X 144mm X 142mm 1.7in X 5.7in X 5.6in

PART NUMBER

Part No.	Frequency	Weight Approx. (kg)
TRANSMITTER		
WL900-01T	US/CAN/900MHz	1.34
WL900-02T	AUS/920MHz	1.34
WL900-03T	EU/2.4GHz	1.34

PART NUMBER

Part No.	Frequency	Weight Approx. (kg)
RECEIVER		
WL900-01R	US/CAN/900MHz	0.07
WL900-02R	AUS/920MHz	0.07
WL900-03R	EU/2.4GHz	0.07

www.anyload.com
© 2025 ANYLOAD V1 dimensions and specifications subject to change without notice

CABLE, CONNECTOR & ACCESSORIES

ANYLOAD

CA

Cable Armor & End Fitting

Features:

- Flexible protective armor, galvanized steel inside, PVC outside
- Protects cable from rodents and mechanical damage
- 0.63" (16mm) internal diameter, 0.8" (20mm) external diameter
- 2" (50mm) minimum bending radius
- Cable armor and fitting sold separately

PART NUMBER

Description	Part No.	Weight (kg) Approx.
Cable Armor (end fitting not included), 100m per roll	CAHP20-1/2-100m	18.0
End fitting only	CAEFGI-1/2	0.1

CB12

Load Cell Cable

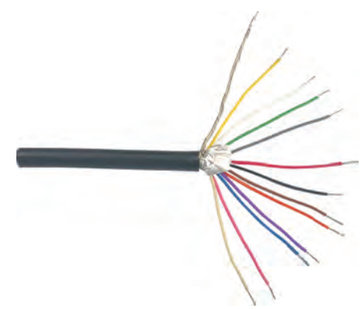

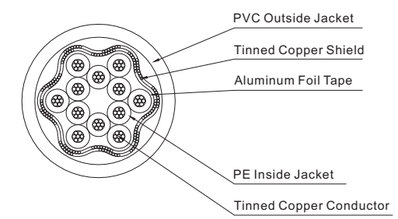

SPECIFICATIONS

Temperature	-30°C to 85°C /-22°F to 185°F
Wire Resistance	≤ 0.09Ω/m
Screen	1
Capacity	≤ 80PF/m
Length	100m (loose) / 300m (with reel)

PART NUMBER	Wire	Outside Diameter	Cross Section Area	AWG	Length	With Reel	Self Weight (approx)	
							KG	LB
CB12-7.6-100m	12 wire	7.6mm±0.2	0.219mm²/wire	24	100m (328ft)	no	9.0	19.8
CB12-7.6-500ft					152m (500ft)	yes	14.4	31.7
CB12-7.6-300m					300m (984ft)	yes	27.0	59.4

© 2025 ANYLOAD V1 dimensions and specifications subject to change without notice

CB4

Load Cell Cable

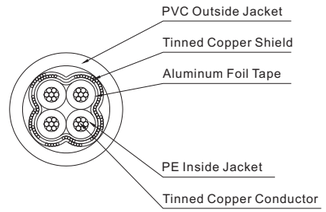

SPECIFICATIONS	
Temperature	-30°C to 85°C /-22°F to 185°F
Wire Resistance	≤ 0.09Ω/m
Screen	1
Capacity	≤ 80PF/m
Length	100m (loose) / 300m (with reel)

PART NUMBER	Wire	Outside Diameter	Cross Section Area	AWG	Length	With Reel	Self Weight (approx)	
							KG	LB
CB4-5.1-100m	4 wire	5.1mm±0.2	0.212mm²/wire	24	100m (328ft)	no	3.2	7.0
CB4-5.1-500ft					152m (500ft)	yes	5.6	12.3
CB4-5.1-300m					300m (984ft)	yes	10.3	22.7
CB4-7.6-100m	4 wire	7.6mm±0.3	0.314mm²/wire	22	100m (328ft)	no	7.9	17.4
CB4-7.6-500ft					152m (500ft)	yes	12.7	27.9
CB4-7.6-300m					300m (984ft)	yes	23.7	52.1

CB4RP

Load Cell Cable

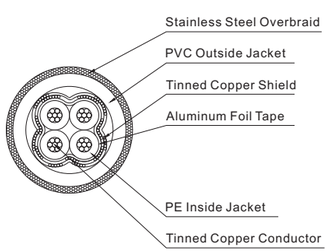

SPECIFICATIONS	
Temperature	-30°C to 85°C /-22°F to 185°F
Wire Resistance	≤ 0.09Ω/m
Screen	1
Capacity	≤ 80PF/m
Length	100m (loose) / 300m (with reel)

PART NUMBER	Wire	Outside Diameter	Cross Section Area	AWG	Length	With Reel	Self Weight (approx)	
							KG	LB
CB4RP-8-100m	4 wire	8.0mm±0.3	0.314mm²/wire	22	100m (328ft)	yes	11.9	26.2

www.anyload.com
© 2025 ANYLOAD V1 dimensions and specifications subject to change without notice

CB6

Load Cell Cable

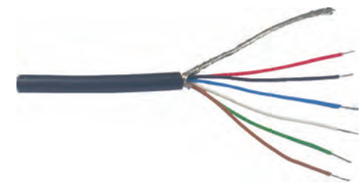

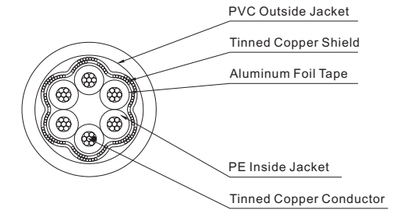

SPECIFICATIONS	
Temperature	-30°C to 85°C /-22°F to 185°F
Wire Resistance	≤ 0.09Ω/m
Screen	1
Capacity	≤ 80PF/m
Length	100m (loose) / 300m (with reel)

PART NUMBER	Wire	Outside Diameter	Cross Section Area	AWG	Length	With Reel	Self Weight (approx)	
							KG	LB
CB6-7.6-100m	6 wire	7.6mm±0.2	0.314mm²/wire	22	100m (328ft)	no	7.4	16.3
CB6-7.6-500ft					152m (500ft)	yes	11.9	26.2
CB6-7.6-300m					300m (984ft)	yes	22.8	50.2

CB6RP

Load Cell Cable

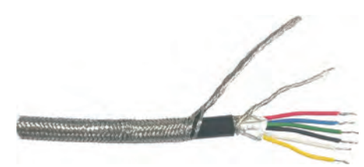

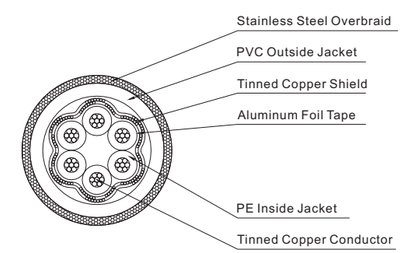

SPECIFICATIONS	
Temperature	-30°C to 85°C /-22°F to 185°F
Wire Resistance	≤ 0.09Ω/m
Screen	1
Capacity	≤ 80PF/m
Length	100m (loose) / 300m (with reel)

PART NUMBER	Wire	Outside Diameter	Cross Section Area	AWG	Length	With Reel	Self Weight (approx)	
							KG	LB
CB6RP-8-100m	6 wire	8.0mm±0.3	0.314mm²/wire	22	100m (328ft)	yes	10.5	23.1

CABLE, CONNECTOR & ACCESSORIES

www.anyload.com
© 2025 ANYLOAD V1 dimensions and specifications subject to change without notice

CB7AP

Load Cell Cable

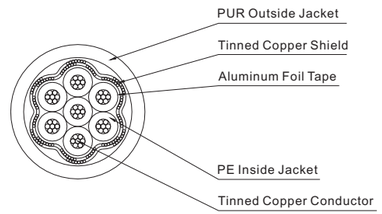

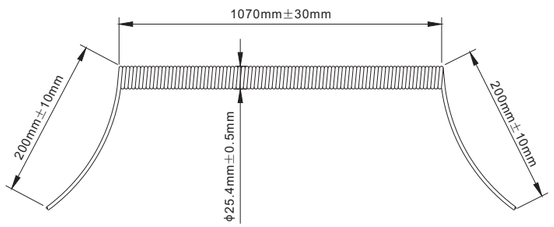

SPECIFICATIONS	
Model	CB7AP
Number of Wires	7
Outside Diameter	7mm ± 0.2
Cross Section Area of Each Wire	0.149mm²
AWG	32
Temperature	-30°C to 85°C /-22°F to 185°F
Wire Resistance	≤ 0.09Ω/m
Screen	1
Capacity	≤ 80PF/m
Length	9m
Inner Shield	Tinned copper braided screen & aluminum foil-polyester tape
Outer Shield	Stainless steel braided screen
Jacket Material	PU
Jacket Colour	Black

PART NUMBER

Description	With Reel	With Inner shield	With Outer shield	Diameter	Part No.	Weight Approx. (kg)
PU cable with 7 wire	No	Yes	No	ϕ7.0	CB7AP-7-9m	0.7

© 2025 ANYLOAD V1 dimensions and specifications subject to change without notice

CSK

Cable Splicing Kit

Features:

- Easily connects cable
- 7 connections, connects up to 6 wire
- Protects the load cell from moisture and water damage through cable connection
- Enclosure Material: Aluminum casting
- IP Protection: IP67

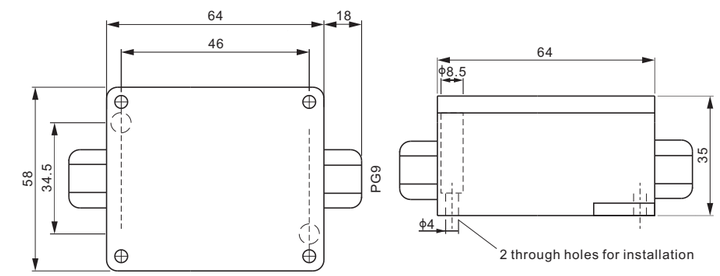

Dimension in mm.

PART NUMBER

Part No.	Weight Approx. (kg)
CSK	0.22

© 2025 ANYLOAD V1 dimensions and specifications subject to change without notice

ANYLOAD

Cable Connector

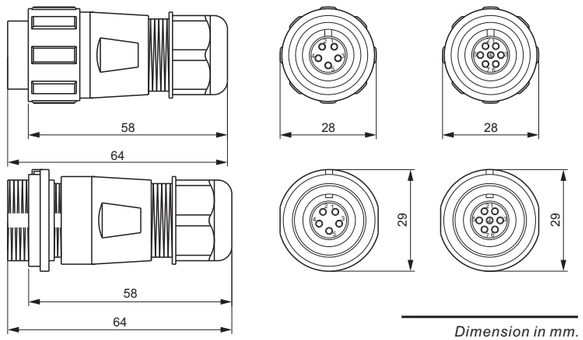

Dimension in mm.

SPECIFICATIONS

Part Number	CCP5-S	CCP5-S1	CCP5-L	CCP5-L1	CCP7-L
Rated Current	30A				15A
Contact Diameter	ϕ3mm×5				ϕ2mm×7
Contact Resistance	1mΩ				2.5mΩ
Wire Size mm²/ AWG	≤ 4.17/11				≤ 2/14
Termination	Screw	Solder	Screw	Solder	Solder
Cable Outer Diameter	ϕ4.5-7mm		ϕ7-12mm		
Shell Material	PC, Nylon66, fire resistance: V-0				
Insert Material	PPS, max temperature 260°C				
Contact Material	Brass with gold plating				
Rated Voltage (AC)	500V				
Test Voltage/min (AC)	1500V				
Mating Cycle	> 500				
Insulation Resistance	2000MΩ				
Working Temperature	-40°C to 85°C / -40°F to 185°F				
Protection Class	IP68				

PART NUMBER

Part No.	Contacts	Termination	Weight Approx. (kg)
CCP5-S	5	screw	0.06
CCP5-S1	5	solder	0.06
CCP5-L	5	screw	0.06
CCP5-L1	5	solder	0.06
CCP7-L	7	solder	0.06

www.anyload.com
© 2025 ANYLOAD V1 dimensions and specifications subject to change without notice

ANYLOAD

Cable Connector

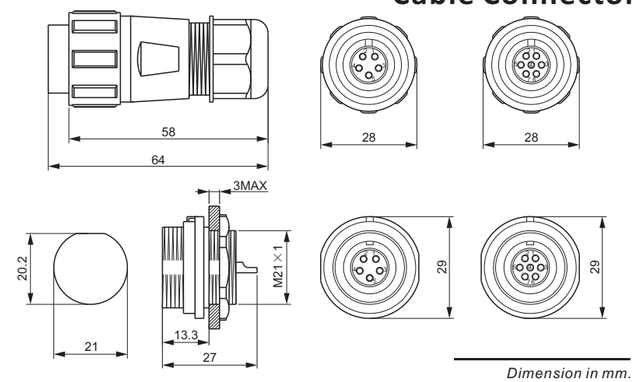

Dimension in mm.

SPECIFICATIONS

Part Number	CCS5-S	CCS5-L	CCS7-L
Rated Current	30A		15A
Contact Diameter	ϕ3mm×5		ϕ2mm×7
Contact Resistance	1mΩ		2.5mΩ
Wire Size mm²/ AWG	≤ 4.17/11		≤ 2/14
Termination	Screw	Screw	Solder
Cable Outer Diameter	ϕ4.5-7mm	ϕ7-12mm	
Shell Material	PC, Nylon66, fire resistance: V-0		
Insert Material	PPS, max temperature 260°C		
Contact Material	Brass with gold plating		
Rated Voltage (AC)	500V		
Test Voltage/min (AC)	1500V		
Mating Cycle	> 500		
Insulation Resistance	2000MΩ		
Working Temperature	-40°C to 85°C / -40°F to 185°F		
Protection Class	IP68		

PART NUMBER

Part No.	Contacts	Termination	Weight Approx. (kg)
CCS5-S	5	Screw	0.05
CCS5-L	5	Screw	0.05
CCS7-L	7	Solder	0.05

www.anyload.com
© 2025 ANYLOAD V1 dimensions and specifications subject to change without notice

BENCH SCALE PLATFORMS

ANYLOAD

Bench Scale, Mild Steel

Measurement Canada

Indicator to be ordered separately.

Features:

- 1/14 inch (25mm) heavy gauge stainless steel pan
- Heavy gauge mild steel construction
- Level bubble
- Bracket, column and column holder included
- Overload capacity: 150% FS

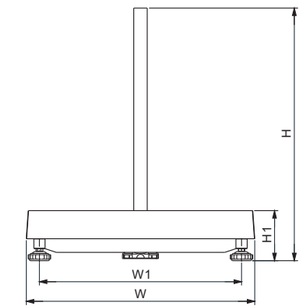

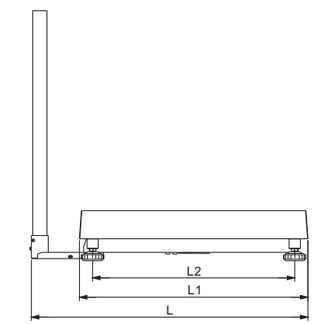

DIMENSIONS(mm)

	L	L1	L2	H	H1	W	W1
TN3030	439	310	240	407	112	310	240
TN4050	639	510	440	665	110	410	340
TN4646	599	470	400	667	112	470	400
TN4660	739	610	540	686	140	470	400
TN6060	739	610	540	667	134	610	540

PART NUMBER	RATED CAPACITY	DIVISION	LOAD CELL CAPACITY	PLATFORM SIZE (inch/cm)	COLUMN LENGTH (inch/cm)	GROSS WEIGHT (kg/lb)
TN3030-15kg	15kg	5g	108JA-20kg	11.8×11.8 / 30×30	15.75 / 40	10.3/22.7
TN3030-30kg	30kg	10g	108JA-50kg	11.8×11.8 / 30×30	15.75 / 40	10.3/22.7
TN3030-60kg	60kg	20g	108JA-75kg	11.8×11.8 / 30×30	15.75 / 40	10.3/22.7
TN4050-60kg	60kg	20g	108JA-75kg	15.8×19.7 / 40×50	26 / 66	17.6/38.8
TN4050-60kg-LE	60kg	20g	108JA-LE75kg	15.8×19.7 / 40×50	26 / 66	17.6/38.8
TN4050-150kg-SE	150kg	50g	108JA-SE200kg	15.8×19.7 / 40×50	26 / 66	17.6/38.8
TN4050-300kg-SE	300kg	100g	108JA-SE400kg	15.8×19.7 / 40×50	26 / 66	17.6/38.8
TN4646-60kg	60kg	20g	108JA-75kg	18.1×18.1 / 46×46	26 / 66	–
TN4646-60kg-LE	60kg	20g	108JA-LE75kg	18.1×18.1 / 46×46	26 / 66	–
TN4646-150kg-SE	150kg	50g	108JA-SE200kg	18.1×18.1 / 46×46	26 / 66	–
TN4646-300kg-SE	300kg	100g	108JA-SE400kg	18.1×18.1 / 46×46	26 / 66	–
TN4660-60kg	60kg	20g	108JA-75kg	18.1×23.6 / 46×60	26 / 66	24.8/54.7
TN4660-60kg-LE	60kg	20g	108JA-LE75kg	18.1×23.6 / 46×60	26 / 66	24.8/54.7
TN4660-150kg-SE	150kg	50g	108JA-SE200kg	18.1×23.6 / 46×60	26 / 66	24.8/54.7
TN4660-300kg-SE	300kg	100g	108JA-SE400kg	18.1×23.6 / 46×60	26 / 66	24.8/54.7
TN6060-150kg-SE	150kg	50g	108JA-SE200kg	23.6×23.6 / 60×60	26 / 66	30.5/67.2
TN6060-300kg-SE	300kg	100g	108JA-SE400kg	23.6×23.6 / 60×60	26 / 66	30.5/67.2

OPTIONAL INDICATORS

■ Indicators (page 188-191)

© 2025 ANYLOAD V1 dimensions and specifications subject to change without notice

TNS

Bench Scale, 304 Stainless Steel

Measurement Canada

Indicator to be ordered separately.

Features:

- Heavy gage stainless steel pan
- Heavy gage stainless steel construction
- Level bubble
- Bracket, column and column holder included
- Overload capacity: 150% FS

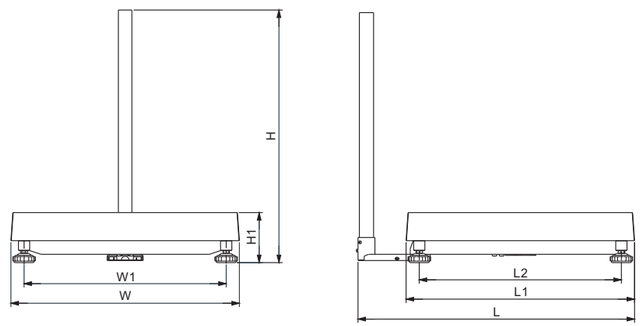

DIMENSIONS(mm)

	L	L1	L2	H	H1	W	W1
TNS3030	439	310	240	407	112	310	240
TNS4050	639	510	440	665	110	410	340
TNS4646	599	470	400	667	112	470	400
TNS4660	739	610	540	686	140	470	400
TNS6060	739	610	540	667	134	610	540

PART NUMBER	RATED CAPACITY	DIVISION	LOAD CELL CAPACITY	PLATFORM SIZE (inch/cm)	COLUMN LENGTH (inch/cm)	GROSS WEIGHT(kg/lb)
TNS3030-15kg	15kg	5g	108JA-20kg	11.8×11.8 / 30×30	15.75 / 40	10.9/24.0
TNS3030-30kg	30kg	10g	108JA-50kg	11.8×11.8 / 30×30	15.75 / 40	10.9/24.0
TNS3030-60kg	60kg	20g	108JA-75kg	11.8×11.8 / 30×30	15.75 / 40	10.9/24.0
TNS4050-60kg	60kg	20g	108JA-75kg	15.8×19.7 / 40×50	26 / 66	18.9/41.7
TNS4050-60kg-LE	60kg	20g	108JA-LE75kg	15.8×19.7 / 40×50	26 / 66	18.9/41.7
TNS4050-150kg-SE	150kg	50g	108JA-SE200kg	15.8×19.7 / 40×50	26 / 66	18.9/41.7
TNS4050-300kg-SE	300kg	100g	108JA-SE400kg	15.8×19.7 / 40×50	26 / 66	18.9/41.7
TNS4646-60kg	60kg	20g	108JA-75kg	18.1×18.1 / 46×46	26 / 66	24.6/54.2
TNS4646-60kg-LE	60kg	20g	108JA-LE75kg	18.1×18.1 / 46×46	26 / 66	24.6/54.2
TNS4646-150kg-SE	150kg	50g	108JA-SE200kg	18.1×18.1 / 46×46	26 / 66	24.6/54.2
TNS4646-300kg-SE	300kg	100g	108JA-SE400kg	18.1×18.1 / 46×46	26 / 66	24.6/54.2
TNS4660-60kg	60kg	20g	108JA-75kg	18.1×23.6 / 46×60	26 / 66	25.2/55.6
TNS4660-60kg-LE	60kg	20g	108JA-LE75kg	18.1×23.6 / 46×60	26 / 66	25.2/55.6
TNS4660-150kg-SE	150kg	50g	108JA-SE200kg	18.1×23.6 / 46×60	26 / 66	25.2/55.6
TNS4660-300kg-SE	300kg	100g	108JA-SE400kg	18.1×23.6 / 46×60	26 / 66	25.2/55.6
TNS6060-150kg-SE	150kg	50g	108JA-SE200kg	23.6×23.6 / 60×60	26 / 66	31.4/69.2
TNS6060-300kg-SE	300kg	100g	108JA-SE400kg	23.6×23.6 / 60×60	26 / 66	31.4/69.2

OPTIONAL INDICATORS

■ Indicators (page 188-191)

LOAD CELL UPGRADE OPTION

■ IP68, IP69K hermetically seal stainless steel load cell, 651JS (page 94)

www.anyload.com
© 2025 ANYLOAD V1 dimensions and specifications subject to change without notice

FLOOR SCALE PLATFORMS & HARDWARES

FSP-TA

ANYLOAD

Floor Scale, Mild Steel

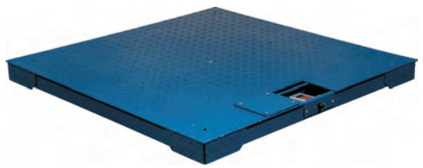

Dual Access to Junction box - from Top & Side:

Measurement Canada

Features:

- Dual access to junction box - from Top & Side
- Heavy-duty industrial grade design
- Ultra Rigid steel honeycomb channeled frame
- Pre-trimmed corner adjustment per OIML & NTEP
- Threaded eye-bolt holes for easy lifting/transport
- Powder coated for maximum surface protection
- Re-enforced steel corner plate protection

Complete Set Includes:

- IP67 alloy steel load cells 563YH-23, OIML MAA & NTEP certified
- 4 swivel mild steel feet AMF-F with removable rubber base
- 2 eyebolts
- 1 IP67 aluminum junction box J04EA-16
- 1 level bubble

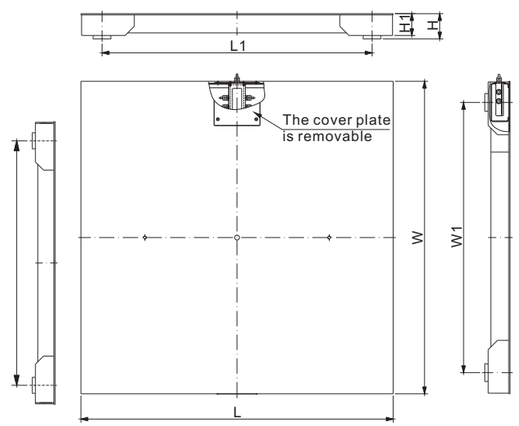

DIMENSIONS

PLATFORM SIZE	H	H1	L	L1	W	W1
mm						
FSP4X4-TA	104-117	85.0	1219.0	1054.0	1219.0	1054.0
inches						
FSP4X4-TA	4.09-4.61	3.35	47.99	41.50	47.99	41.50

DIMENSIONS

PART NUMBER	RATED CAPACITY	DIVISION	LOAD CELL CAPACITY	SIZE IN INCHES (W x L x H)	WEIGHT	DECK PLATE THICKNESS
Painted Mild Steel						
FSP4×4-5Klb-TA	5Klb	1lb	563YH-23-2.5Klb	48"×48"×4"	120kg/265 lb	0.20" / 5mm

OPTIONAL ACCESSORIES

- Indicators (page 188-191)
- Ramp-17 (page 215)
- Bumper Guards (page 216)
- Scale Base Mounting Plate (page 223)

Measurement Canada Approval for:
Capacity: 1Klb to 5Klb;
Platform size: 3ft X 3ft to 5ft X 5ft

NTEP 1:5 000 Class III Approval for
Capacity: 1Klb to 10Klb;
Platform size: 3ft X 3ft to 5ft X 5ft

© 2025 ANYLOAD V1 dimensions and specifications subject to change without notice

ANYLOAD

FSP-HD; FSP-GH

Heavy Duty Floor Scale, Mild Steel

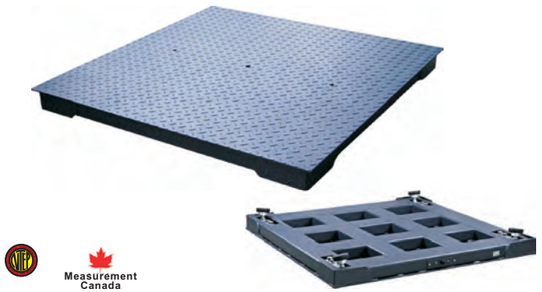

Measurement Canada

Features:

- Super heavy duty industrial design
- 6mm thick rigid steel channel frame
- Pre-trimmed corners
- Threaded eyebolt holes for easy lifting

Complete Set Includes:

- IP67 alloy steel load cells 563YH-23, OIML MAA & NTEP certified
- 4 heavy duty swivel mild steel feet AMF-F-3/4 or AMF-F-M18 with removable rubber base
- 2 eyebolts
- 1 IP67 aluminum junction box J04EA-16
- 1 level bubble

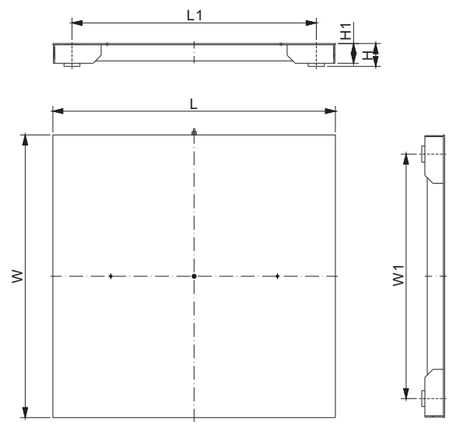

DIMENSIONS

PLATFORM SIZE	H	H1	L	L1	W	W1
mm						
FSP4X4-HD	126-133	86.0	1219.0	1054.0	1219.0	1054.0
FSP4X4-GH	126-133	86.0	1219.0	1054.0	1219.0	1054.0
inches						
FSP4X4-HD	4.96-5.24	3.39	47.99	41.50	47.99	41.50
FSP4X4-GH	4.96-5.24	3.39	47.99	41.50	47.99	41.50

DIMENSIONS

PART NUMBER	RATED CAPACITY	DIVISION	LOAD CELL CAPACITY	SIZE IN INCHES (W x L x H)	WEIGHT	DECK PLATE THICKNESS
Painted Mild Steel						
FSP4×4-2.5t-HD	2.5t	0.5kg	563YH-23-LE1.5t	48"×48"×4"	190kg/419lb	0.24" / 6mm
FSP4×4-5t-HD	5t	1kg	563YH-23-2.5t	48"×48"×4"	190kg/419lb	0.24" / 6mm
FSP4×4-5Klb-HD	5Klb	1lb	563YH-23-LE2.5Klb	48"×48"×4"	190kg/419lb	0.24" / 6mm
FSP4×4-10Klb-HD	10Klb	2lb	563YH-23-5Klb	48"×48"×4"	190kg/419lb	0.24" / 6mm
Hot Dip Galvanized Mild Steel						
FSP4×4-5Klb-GH	5Klb	1lb	563YH-23-LE2.5Klb	48"×48"×4"	185kg/408 lb	0.24" / 6mm
FSP4×4-10Klb-GH	10Klb	2lb	563YH-23-5Klb	48"×48"×4"	185kg/408 lb	0.24" / 6mm

OPTIONAL ACCESSORIES

- Indicators (page 188-191)
- Bumper Guards (page 216)
- Scale Base Mounting Plate (page 223)

Measurement Canada Approval for
- 3X3-5Klb - 4X4-5Klb -5X5-5Klb

NTEP 1:5 000 Class III Approval for
- 3X3-1Klb - 4X4-1Klb - 5X5-1Klb
- 3X3-2Klb - 4X4-2Klb - 5X5-2Klb
- 3X3-5Klb - 4X4-5Klb - 5X5-5Klb
- 3X3-10Klb - 4X4-10Klb - 5X5-10Klb

© 2025 ANYLOAD V1 dimensions and specifications subject to change without notice

Floor Scale, Mild Steel

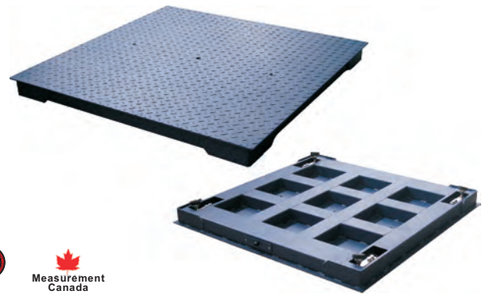

Measurement Canada

Features:

- Heavy-duty industrial design
- Rigid steel channel frame
- Pre-trimmed corners
- Threaded eyebolt holes for easy lifting
- Powder Coating

Complete Set Includes:

- IP67 alloy steel load cells 563YH-23, OIML MAA & NTEP certified
- 4 swivel mild steel feet AMF-F with removable rubber base
- 2 eyebolts
- 1 IP67 aluminum junction box J04EA-16
- 1 level bubble

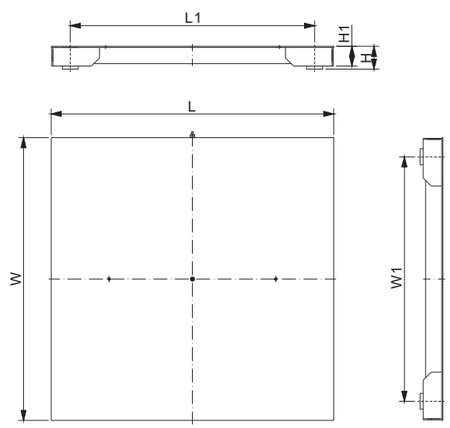

DIMENSIONS

PLATFORM SIZE	H	H1	L	L1	W	W1
mm						
FSP3X3	103-117	85.0	914.0	750.0	914.0	750.0
FSP4X4	104-117	85.0	1219.0	1054.0	1219.0	1054.0
FSP5X5	109-122	86.0	1500.0	1300.0	1500.0	1300.0
FSP5X5-LE	122-128	86.0	1500.0	1300.0	1500.0	1300.0
FSP4X6	109-120	86.0	1219.0	1054.0	1830.0	1665.0
FSP5X7	109-120	86.0	1500.0	1300.0	2134.0	1934.0
FSP4X4-GI	104-117	85.0	1219.0	1054.0	1219.0	1054.0
inches						
FSP3X3	4.06-4.61	3.35	35.98	29.53	35.98	29.53
FSP4X4	4.09-4.61	3.35	47.99	41.50	47.99	41.50
FSP5X5	4.29-4.80	3.39	59.06	51.18	59.06	51.18
FSP5X5-LE	4.80-5.04	3.39	59.06	51.18	59.06	51.18
FSP4X6	4.29-4.72	3.39	47.99	41.50	72.05	65.55
FSP5X7	4.29-4.72	3.39	59.06	51.18	84.02	76.14
FSP4X4-GI	4.09-4.61	3.35	47.99	41.50	47.99	41.50

© 2025 ANYLOAD V1 dimensions and specifications subject to change without notice

Floor Scale, Mild Steel

DIMENSIONS

PART NUMBER	RATED CAPACITY	DIVISION	LOAD CELL CAPACITY	SIZE IN INCHES (W x L x H)	WEIGHT	DECK PLATE THICKNESS
Painted Mild Steel						
FSP3×3-500kg	500kg	0.1kg	563YH-23-300kg	36"×36"×4"	72kg /159 lb	0.20" / 5mm
FSP3×3-1t	1t	0.2kg	563YH-23-500kg	36"×36"×4"	72kg /159 lb	0.20" / 5mm
FSP3×3-2.5t	2.5t	0.5kg	563YH-23-1t	36"×36"×4"	72kg /159 lb	0.20" / 5mm
FSP3×3-1Klb	1Klb	0.2lb	563YH-23-500lb	36"×36"×4"	72kg /159 lb	0.20" / 5mm
FSP3×3-2Klb	2Klb	0.5lb	563YH-23-1Klb	36"×36"×4"	72kg /159 lb	0.20" / 5mm
FSP3×3-5Klb	5Klb	1lb	563YH-23-2.5Klb	36"×36"×4"	72kg /159 lb	0.20" / 5mm
FSP4×4-500kg	500kg	0.1kg	563YH-23-300kg	48"×48"×4"	120kg/265 lb	0.20" / 5mm
FSP4×4-1t	1t	0.2kg	563YH-23-500kg	48"×48"×4"	120kg/265 lb	0.20" / 5mm
FSP4×4-2.5t	2.5t	0.5kg	563YH-23-1t	48"×48"×4"	120kg/265 lb	0.20" / 5mm
FSP4×4-5t	5t	1kg	563YH-23-2t	48"×48"×4"	120kg/265 lb	0.20" / 5mm
FSP4×4-1Klb	1Klb	0.2lb	563YH-23-500lb	48"×48"×4"	120kg/265 lb	0.20" / 5mm
FSP4×4-2Klb	2Klb	0.5lb	563YH-23-1Klb	48"×48"×4"	120kg/265 lb	0.20" / 5mm
FSP4×4-5Klb	5Klb	1lb	563YH-23-2.5Klb	48"×48"×4"	120kg/265 lb	0.20" / 5mm
FSP4×4-10Klb	10Klb	2lb	563YH-23-4Klb	48"×48"×4"	120kg/265 lb	0.20" / 5mm
FSP5×5-2.5t	2.5t	0.5kg	563YH-23-1t	59"×59"×4"	200kg/441 lb	0.24" / 6mm
FSP5×5-5t	5t	1kg	563YH-23-2t	59"×59"×4"	200kg/441 lb	0.24" / 6mm
FSP5×5-5Klb	5Klb	1lb	563YH-23-2.5Klb	59"×59"×4"	200kg/441 lb	0.24" / 6mm
FSP5×5-10Klb	10Klb	2lb	563YH-23-SE5Klb	59"×59"×4"	200kg/441 lb	0.24" / 6mm
FSP5×5-10Klb-LE	10Klb	2lb	563YH-23-5Klb	59"×59"×5"	210kg/463 lb	0.24" / 6mm
FSP4×6-2.5t	2.5t	0.5kg	563YH-23-1t	48"×72"×4"	180kg/397 lb	0.24" / 6mm
FSP4×6-5t	5t	1kg	563YH-23-2t	48"×72"×4"	180kg/397 lb	0.24" / 6mm
FSP4×6-5Klb	5Klb	1lb	563YH-23-2.5Klb	48"×72"×4"	180kg/397 lb	0.24" / 6mm
FSP4×6-10Klb	10Klb	2lb	563YH-23-SE5Klb	48"×72"×4"	180kg/397 lb	0.24" / 6mm
FSP5×7-2.5t	2.5t	0.5kg	563YH-23-1t	59"×84"×4"	260kg/573 lb	0.24" / 6mm
FSP5×7-5t	5t	1kg	563YH-23-2t	59"×84"×4"	260kg/573 lb	0.24" / 6mm
FSP5×7-5Klb	5Klb	1lb	563YH-23-2.5Klb	59"×84"×4"	260kg/573 lb	0.24" / 6mm
FSP5×7-10Klb	10Klb	2lb	563YH-23-SE5Klb	59"×84"×4"	260kg/573 lb	0.24" / 6mm
Hot Dip Galvanized Mild Steel						
FSP4×4-5Klb-GI	5Klb	1lb	563YH-23-2.5Klb	48"×48"×4"	138kg/304 lb	0.20" / 5mm

OPTIONAL ACCESSORIES

- Indicators (page 188-191)
- Ramp-17 (page 215)
- Bumper Guards (page 216)
- Scale Base Mounting Plate (page 223)

Measurement Canada Approval for
- 3X3-5Klb - 4X4-5Klb -5X5-5Klb

NTEP 1:5 000 Class III Approval for
- 3X3-1Klb - 4X4-1Klb - 5X5-1Klb
- 3X3-2Klb - 4X4-2Klb - 5X5-2Klb
- 3X3-5Klb - 4X4-5Klb - 5X5-5Klb
- 3X3-10Klb - 4X4-10Klb - 5X5-10Klb

© 2025 ANYLOAD V1 dimensions and specifications subject to change without notice

FSP-SS-S4

Floor Scale, Stainless Steel

Measurement Canada

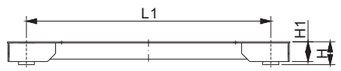

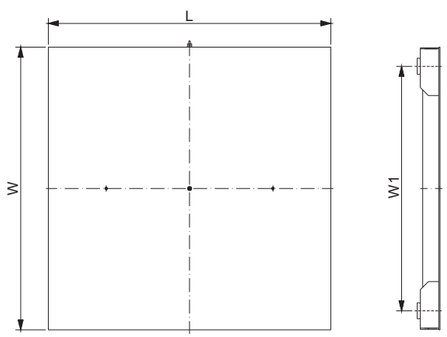

Features:

- 17-4PH & 304 Stainless steel heavy-duty industrial design
- Rigid steel channel frame
- Pre-trimmed corners
- Threaded eyebolt holes for easy lifting

Complete Set Includes:

- IP68 stainless steel load cells 563YS, OIML MAA & NTEP certified
- 4 swivel stainless steel feet AMFS4 with removable rubber base
- 2 eyebolts
- 1 IP65 stainless steel junction box J04ES-FS
- 1 level bubble

DIMENSIONS

PLATFORM SIZE	H	H1	L	L1	W	W1
mm						
FSP3X3-SS-S4	107-121	84.0	914.0	750.0	914.0	750.0
FSP4X4-SS-S4	107-121	85.0	1219.0	1054.0	1219.0	1054.0
FSP5X5-SS-S4	108-122	86.0	1500.0	1300.0	1500.0	1300.0
inches						
FSP3X3-SS-S4	4.21-4.76	3.31	35.98	29.53	35.98	29.53
FSP4X4-SS-S4	4.21-4.76	3.35	47.99	41.50	47.99	41.50
FSP5X5-SS-S4	4.25-4.80	3.39	59.06	51.18	59.06	51.18

DIMENSIONS

PART NUMBER	RATED CAPACITY	DIVISION	LOAD CELL CAPACITY	SIZE IN INCHES (W x L x H)	WEIGHT	DECK PLATE THICKNESS
FSP3×3-500kg-SS-S4	500kg	0.1kg	563YS-300kg	36”×36”×4”	75kg /165 lb	0.16” / 4mm
FSP3×3-1t-SS-S4	1t	0.2kg	563YS-500kg	36”×36”×4”	75kg /165 lb	0.16” / 4mm
FSP3×3-2.5t-SS-S4	2.5t	0.5kg	563YS-1t	36”×36”×4”	75kg /165 lb	0.16” / 4mm
FSP3×3-1Klb-SS-S4	1Klb	0.2lb	563YS-500lb	36”×36”×4”	75kg /165 lb	0.16” / 4mm
FSP3×3-2Klb-SS-S4	2Klb	0.5lb	563YS-1Klb	36”×36”×4”	75kg /165 lb	0.16” / 4mm
FSP3×3-5Klb-SS-S4	5Klb	1lb	563YS-2.5Klb	36”×36”×4”	75kg /165 lb	0.16” / 4mm
FSP4×4-500kg-SS-S4	500kg	0.1kg	563YS-300kg	48”×48”×4”	120kg/265 lb	0.20” / 5mm
FSP4×4-1t-SS-S4	1t	0.2kg	563YS-500kg	48”×48”×4”	120kg/265 lb	0.20” / 5mm
FSP4×4-2.5t-SS-S4	2.5t	0.5kg	563YS-1t	48”×48”×4”	120kg/265 lb	0.20” / 5mm
FSP4×4-5t-SS-S4	5t	1kg	563YS-2t	48”×48”×4”	120kg/265 lb	0.20” / 5mm
FSP4×4-1Klb-SS-S4	1Klb	0.2lb	563YS-500lb	48”×48”×4”	120kg/265 lb	0.20” / 5mm
FSP4×4-2Klb-SS-S4	2Klb	0.5lb	563YS-1Klb	48”×48”×4”	120kg/265 lb	0.20” / 5mm
FSP4×4-5Klb-SS-S4	5Klb	1lb	563YS-2.5Klb	48”×48”×4”	120kg/265 lb	0.20” / 5mm
FSP4×4-10Klb-SS-S4	10Klb	2lb	563YS-4Klb	48”×48”×4”	120kg/265 lb	0.20” / 5mm
FSP5×5-2.5t-SS-S4	2.5t	0.5kg	563YS-1t	59”×59”×4”	200kg/441 lb	0.24” / 6mm
FSP5×5-5t-SS-S4	5t	1kg	563YS-2t	59”×59”×4”	200kg/441 lb	0.24” / 6mm
FSP5×5-5Klb-SS-S4	5Klb	1lb	563YS-2.5Klb	59”×59”×4”	200kg/441 lb	0.24” / 6mm
FSP5×5-10Klb-SS-S4	10Klb	2lb	563YS-SE5Klb	59”×59”×4”	200kg/441 lb	0.24” / 6mm

Measurement Canada Approval for
- 3X3-5Klb - 4X4-5Klb -5X5-5Klb

NTEP 1:5 000 Class III Approval for
- 3X3-1Klb - 4X4-1Klb - 5X5-1Klb
- 3X3-2Klb - 4X4-2Klb - 5X5-2Klb
- 3X3-5Klb - 4X4-5Klb - 5X5-5Klb
- 3X3-10Klb - 4X4-10Klb - 5X5-10Klb

OPTIONAL ACCESSORIES

- Indicators (page 188-191)
- Ramp-17 (page 215)
- Bumper Guards (page 216)

www.anyload.com
© 2025 ANYLOAD V1 dimensions and specifications subject to change without notice

RAMP-17

Floor Scale Ramp

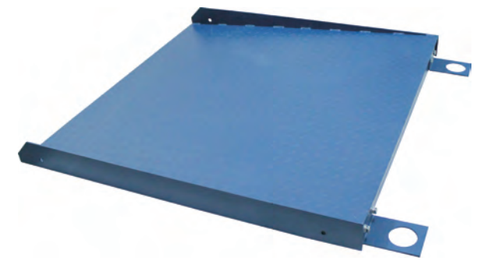

Features:

- Mild steel construction
- Rugged checker plate surface
- Surface coated with high quality industrial paint
- Includes removable L-shape base mounting plates with connecting nuts and bolts

RAMP Includes:

- 1 piece x ramp
- 2 pieces x L-shape base mounting plates (item code: BG-P80)
- 4 pieces x M10X30mm nuts and bolts

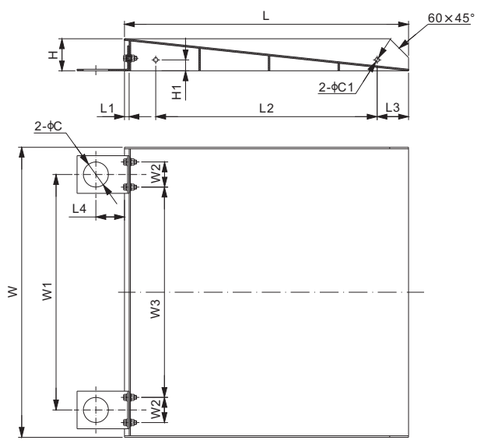

DIMENSIONS

PART NUMBER	C	C1	H	H1	L	L1	L2	L3	L4	W	W1	W2	W3	Weight Approx. (kg)
inches														
RAMP3×3-17	3.15	0.55	4.02	1.37	35.67	0.59	27.80	3.93	3.62	36.38	29.53	3.15	26.38	50.9
RAMP3×4-17	3.15	0.55	4.02	1.37	47.76	0.59	39.37	4.13	3.62	36.38	29.53	3.15	26.38	–
RAMP4×3-17	3.15	0.55	4.02	1.37	35.67	0.59	27.80	3.93	3.62	48.39	41.50	3.15	38.35	61
RAMP4×4-17	3.15	0.55	4.02	1.37	47.76	0.59	39.37	4.13	3.62	48.39	41.50	3.15	38.35	81
RAMP5×3-17	3.15	0.55	4.02	1.37	35.67	0.59	27.80	3.93	3.62	59.45	52.56	3.15	49.41	–
RAMP5×4-17	3.15	0.55	4.02	1.37	47.76	0.59	39.37	4.13	3.62	59.45	51.18	3.15	48.03	103
mm (conversion of above dimensions)														
RAMP3×3-17	80	14	102	35	906	15	706	100	92	924	750	80	670	50.9
RAMP3×4-17	80	14	102	35	1213	15	1000	105	92	924	750	80	670	–
RAMP4×3-17	80	14	102	35	906	15	706	100	92	1229	1054	80	974	61
RAMP4×4-17	80	14	102	35	1213	15	1000	105	92	1229	1054	80	974	81
RAMP5×3-17	80	14	102	35	906	15	706	100	92	1510	1335	80	1255	–
RAMP5×4-17	80	14	102	35	1213	15	1000	105	92	1510	1300	80	1220	103

AVAILABLE OPTIONS

- Stainless steel version: RAMPSS-17

www.anyload.com
© 2025 ANYLOAD V1 dimensions and specifications subject to change without notice

BG

ANYLOAD

Bumper Guard

BG

BGC

BGC (Bumper Guard Corner)
to be ordered separately.

Features:

- Heavy duty mild steel
- Surface coated with high quality yellow paint

Bumper Guard Kit Includes:

- 1 piece x bumper guard bar
- 2 pieces x L-shape base mounting plates (item code: BG-P80)
- 4 pieces x M10X30mm nuts and bolts

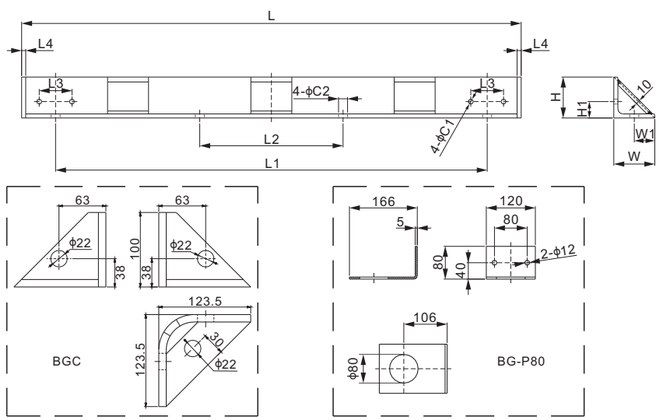

DIMENSIONS

PART NUMBER	C1	C2	H	H1	L	L1	L2	L3	L4	W	W1	Weight Approx. (kg)
inches												
BG-36C	0.47	0.87	3.94	1.57	35.98	29.53	9.84	3.15	0.39	3.94	1.97	–
BG-48C	0.47	0.87	3.94	1.57	47.99	41.50	13.78	3.15	0.39	3.94	1.97	21.6
BG-59C	0.47	0.87	3.94	1.57	59.06	51.18	17.32	3.15	0.39	3.94	1.97	–
mm (conversion of above dimensions)												
BG-36C	12.0	22.0	100	40.0	914	750	250.0	80.0	10.0	100	50.0	–
BG-48C	12.0	22.0	100	40.0	1219	1054	350.0	80.0	10.0	100	50.0	21.6
BG-59C	12.0	22.0	100	40.0	1500	1300	440.0	80.0	10.0	100	50.0	–

www.anyload.com
© 2025 ANYLOAD V1 dimensions and specifications subject to change without notice

ANYLOAD

QS1

Quadro Set 1

Load Cell Certifications:

Features:

- NTEP certified load cells from 500lb-10Klb
- OIML certified load cells from 500kg-5t
- CE , RoHS and ExNepsi certified load cells
- Junction box is equipped with integrated resistor networks
- Cable is coloured in accordance to the ANYLOAD color code

Complete Set:

- 4 pcs x Alloy steel single ended shear beam load cells (563YH or 563YH-23)
- 4 pcs x Alloy steel load cell spacers (SPACER)
- 4 pcs x Alloy steel mounting feet (AMF-F)
- 1 pc x Aluminum junction box (J04EA-16 or J04SA-16)
- 1 pc x 20m (65 feet) PVC cable (CB4-5.1-20m)

PART NUMBER

QS1-SA-16 (563YH, J04SA-16)

Load Cell Capacity	Part No.	Weight Approx. (kg)
500lb	QS1-SA-16-500lb	7.9
1Klb	QS1-SA-16-1Klb	7.9
2.5Klb	QS1-SA-16-2.5Klb	7.9
4Klb	QS1-SA-16-4Klb	7.9
SE5Klb	QS1-SA-16-SE5Klb	7.9
5Klb	QS1-SA-16-5Klb	11.7
10Klb	QS1-SA-16-10Klb	11.7

QS1-16 (563YH, J04EA-16)

Load Cell Capacity	Part No.	Weight Approx. (kg)
500kg	QS1-16-500kg	8.1
1t	QS1-16-1t	8.1
1.5t	QS1-16-1.5t	8.1
2t	QS1-16-2t	8.1
3t	QS1-16-3t	11.7
5t	QS1-16-5t	11.7
500lb	QS1-16-500lb	7.9
1Klb	QS1-16-1Klb	7.9
2.5Klb	QS1-16-2.5Klb	7.9
4Klb	QS1-16-4Klb	7.9
SE5Klb	QS1-16-SE5Klb	7.9
5Klb	QS1-16-5Klb	11.7
10Klb	QS1-16-10Klb	11.7

PART NUMBER

QS1-SA-23 (563YH-23, J04SA-16)

Load Cell Capacity	Part No.	Weight Approx. (kg)
500lb	QS1-SA-23-500lb	7.9
1Klb	QS1-SA-23-1Klb	7.9
2.5Klb	QS1-SA-23-2.5Klb	7.9
4Klb	QS1-SA-23-4Klb	7.9
SE5Klb	QS1-SA-23-SE5Klb	7.9
5Klb	QS1-SA-23-5Klb	11.7
10Klb	QS1-SA-23-10Klb	11.7

QS1-23 (563YH-23, J04EA-16)

Load Cell Capacity	Part No.	Weight Approx. (kg)
500lb	QS1-23-500lb	7.9
1Klb	QS1-23-1Klb	7.9
2.5Klb	QS1-23-2.5Klb	7.9
4Klb	QS1-23-4Klb	7.9
SE5Klb	QS1-23-SE5Klb	7.9
5Klb	QS1-23-5Klb	11.7
10Klb	QS1-23-10Klb	11.7

www.anyload.com
© 2025 ANYLOAD V1 dimensions and specifications subject to change without notice

QS3; QS5

ANYLOAD

Quadro Set 3; Quadro Set 5

Load Cell Certifications:

Features:

- NTEP certified load cells from 500lb-10Klb
- OIML certified load cells from 500kg-5t & 10K-10Klb (QS3); OIML certified load cells from 1Klb-10Klb (QS5);
- CE , RoHS and ExNepsi certified load cells
- Full Scale Output: 2mV/V ± 0.25% (QS3); 3mV/V ± 0.25% (QS5);
- Junction box is equipped with integrated resistor networks
- Cable is coloured in accordance to the ANYLOAD color code

Complete Set:

- 4 pcs x Stainless steel single ended shear beam load cells (563YS or 563YS30)
- 4 pcs x Stainless steel load cell spacers (SPACERSS)
- 4 pcs x Stainless steel mounting feet (AMFSS)
- 1 pc x Aluminum junction box (J04EA-16 or J04SA-16)
- 1 pc x 20m (65 feet) PVC cable (CB4-5.1-20m)

PART NUMBER

QS3-SA-16 (563YS, J04SA-16)

Load Cell Capacity	Part No.	Weight Approx. (kg)
500lb	QS3-SA-16-500lb	7.6
1Klb	QS3-SA-16-1Klb	7.6
2.5Klb	QS3-SA-16-2.5Klb	7.6
4Klb	QS3-SA-16-4Klb	7.6
SE5Klb	QS3-SA-16-SE5Klb	7.6
5Klb	QS3-SA-16-5Klb	11.4
10Klb	QS3-SA-16-10Klb	11.4

QS3-16 (563YS, J04EA-16)

Load Cell Capacity	Part No.	Weight Approx. (kg)
250kg	QS3-16-250kg	7.6
500kg	QS3-16-500kg	7.6
1t	QS3-16-1t	7.6
2t	QS3-16-2t	7.6
3t	QS3-16-3t	11.4
5t	QS3-16-5t	11.4
500lb	QS3-16-500lb	7.6
1Klb	QS3-16-1Klb	7.6
2.5Klb	QS3-16-2.5Klb	7.6
4Klb	QS3-16-4Klb	7.6
SE5Klb	QS3-16-SE5Klb	7.6
5Klb	QS3-16-5Klb	11.4
10Klb	QS3-16-10Klb	11.4

PART NUMBER

QS5-SA-16 (563YS30, J04SA-16)

Load Cell Capacity	Part No.	Shipping Weight Approx. (kg)
500lb	QS5-GS-SA-16-500lb	7.6
1Klb	QS5-SA-16-1Klb	7.6
2.5Klb	QS5-SA-16-2.5Klb	7.6
4Klb	QS5-SA-16-4Klb	7.6
SE5Klb	QS5-SA-16-SE5Klb	7.6
5Klb	QS5-SA-16-5Klb	11.4
10Klb	QS5-SA-16-10Klb	11.4

QS5-16 (563YS30, J04EA-16)

Load Cell Capacity	Part No.	Shipping Weight Approx. (kg)
500lb	QS5-GS-16-500lb	7.6
1Klb	QS5-16-1Klb	7.6
2.5Klb	QS5-16-2.5Klb	7.6
4Klb	QS5-16-4Klb	7.6
SE5Klb	QS5-16-SE5Klb	7.6
5Klb	QS5-16-5Klb	11.4
10Klb	QS5-16-10Klb	11.4

www.anyload.com
© 2025 ANYLOAD V1 dimensions and specifications subject to change without notice

ANYLOAD

QS3-S4; QS5-S4

Quadro Set 3; Quadro Set 5

Load Cell Certifications:

Features:

- NTEP certified load cells from 500lb-10Klb
- OIML certified load cells from 500kg-5t & 1K-10Klb (QS3-S4); OIML certified load cells from 1Klb-10Klb (QS5-S4);
- CE , RoHS and ExNepsi certified load cells
- Full Scale Output: 2mV/V ± 0.25% (QS3-S4); 3mV/V ± 0.25% (QS5-S4);
- Junction box is equipped with integrated resistor networks
- Cable is coloured in accordance to the ANYLOAD color code

Complete Set:

- 4 pcs x Stainless steel single ended shear beam load cells (563YS or 563YS30)
- 4 pcs x Stainless steel load cell spacers (SPACERSS)
- 4 pcs x Stainless steel mounting feet (AMFS4)
- 1 pc x Stainless steel junction box (J04ES-FS or J04SS-FS)
- 1 pc x 20m (65 feet) PVC cable (CB4-5.1-20m)

PART NUMBER*

QS3-S4 (563YS, J04SS-FS)

Load Cell Capacity	Part No.	Weight Approx. (kg)
500lb	QS3-S4-SF-500lb	7.6
1Klb	QS3-S4-SF-1Klb	7.6
2.5Klb	QS3-S4-SF-2.5Klb	7.6
4Klb	QS3-S4-SF-4Klb	7.6
SE5Klb	QS3-S4-SF-SE5Klb	7.6
5Klb	QS3-S4-SF-5Klb	11.4
10Klb	QS3-S4-SF-10Klb	11.4

QS3-S4 (563YS, J04ES-FS)

Load Cell Capacity	Part No.	Weight Approx. (kg)
250kg	QS3-S4-EF-250kg	7.6
500kg	QS3-S4-EF-500kg	7.6
1t	QS3-S4-EF-1t	7.6
2t	QS3-S4-EF-2t	7.6
3t	QS3-S4-EF-3t	11.4
5t	QS3-S4-EF-5t	11.4
500lb	QS3-S4-EF-500lb	7.6
1Klb	QS3-S4-EF-1Klb	7.6
2.5Klb	QS3-S4-EF-2.5Klb	7.6
4Klb	QS3-S4-EF-4Klb	7.6
SE5Klb	QS3-S4-EF-SE5Klb	7.6
5Klb	QS3-S4-EF-5Klb	11.4
10Klb	QS3-S4-EF-10Klb	11.4

* If to use J04ES, the part number: QS3-S4-ES-capacity or QS5-S4-ES-capacity;
If to use J04SS, the part number: QS3-S4-SS-capacity or QS5-S4-SS-capacity

PART NUMBER*

QS5-S4 (563YS30, J04SS-FS)

Load Cell Capacity	Part No.	Shipping Weight Approx. (kg)
500lb	QS5-GS-S4-SF-500lb	7.6
1Klb	QS5-S4-SF-1Klb	7.6
2.5Klb	QS5-S4-SF-2.5Klb	7.6
4Klb	QS5-S4-SF-4Klb	7.6
SE5Klb	QS5-S4-SF-SE5Klb	7.6
5Klb	QS5-S4-SF-5Klb	11.4
10Klb	QS5-S4-SF-10Klb	11.4

QS5-S4 (563YS30, J04ES-FS)

Load Cell Capacity	Part No.	Shipping Weight Approx. (kg)
500lb	QS5-GS-S4-EF-500lb	7.6
1Klb	QS5-S4-EF-1Klb	7.6
2.5Klb	QS5-S4-EF-2.5Klb	7.6
4Klb	QS5-S4-EF-4Klb	7.6
SE5Klb	QS5-S4-EF-SE5Klb	7.6
5Klb	QS5-S4-EF-5Klb	11.4
10Klb	QS5-S4-EF-10Klb	11.4

www.anyload.com
© 2025 ANYLOAD V1 dimensions and specifications subject to change without notice

AMF-F

ANYLOAD

Active Mounting Foot, Alloy Steel

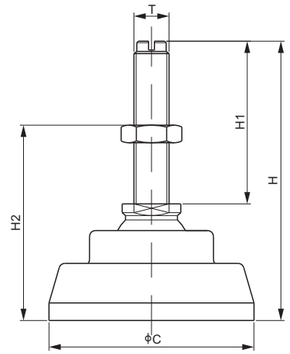

DIMENSIONS

PART NUMBER	RATED CAPACITY	C	H	H1	H2	T	Self Weight Approx.(kg)
	lb/inches						
AMF-F-1/2	100-4,000; SE5,000	2.76	3.85	2.17	2.01-3.68	1/2-20 UNF-2A	0.5
AMF-F-3/4	5,000-10,000	3.15	4.07	2.19	2.24-3.90	3/4-16 UNF-2A	0.8
AMF-F-1	15,000; 20,000	4.17	5.51	2.95	3.21-5.45	1-14 UNS-2A	1.8
	kg/mm						
AMF-F-M12	100-2,000	70	97.8	55.0	51-93.5	M12X1.75	0.5
AMF-F-M18	2,500; 5,000	80	103.5	55.5	57-99	M18X1.50	0.8
AMF-F-M24	10,000	106	140.0	75.0	81.5-138.5	M24X2.00	1.8

AVAILABLE OPTIONS

- 2Cr13 Stainless Steel: AMFSS-F-xx
- 17-4PH and 304 Stainless Steel: AMFS4-F-xx

FMF

Fixed Mounting Foot, Alloy Steel

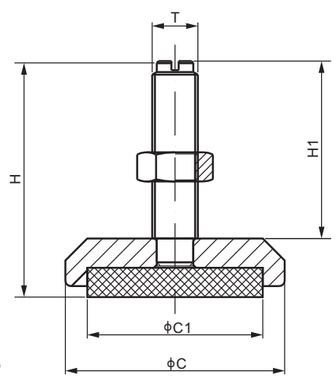

DIMENSIONS

PART NUMBER	RATED CAPACITY	C	C1	H	H1	T	Self Weight Approx.(kg)
	lb/mm						
FMF60-1/2	500-SE5,000	60	48	64.5	48.5	1/2-20 UNF	0.3
FMF70-3/4	5,000-10,000	70	58	76.0	58.0	3/4-16 UNF	–
	kg/mm						
FMF60-M12	100-2,000	60	48	64.5	48.5	M12×1.75	0.3
FMF70-M18	2,500-5,000	70	58	76.0	58.0	M18×1.50	–

AVAILABLE OPTIONS

- 2Cr13 Stainless Steel: FMFSSxx-xx
- 17-4PH and 304 Stainless Steel: FMFS4xx-xx

www.anyload.com
© 2025 ANYLOAD V1 dimensions and specifications subject to change without notice

ANYLOAD

AMFS4-F

Active Mounting Foot, 17-4PH and 304 Stainless Steel

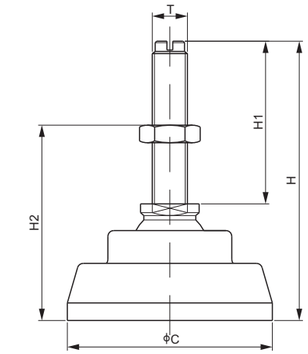

DIMENSIONS

PART NUMBER	RATED CAPACITY	C	H	H1	H2	T	Self Weight Approx.(kg)
	lb/inches						
AMFS4-F-1/2	100-4,000; SE5,000	2.76	3.85	2.19	2.01-3.68	1/2-20 UNF-2A	0.5
AMFS4-F-3/4	5,000-10,000	3.15	4.07	2.19	2.24-3.90	3/4-16 UNF-2A	0.8
AMFS4-F-1	15,000; 20,000	3.94	5.65	2.95	3.21-5.45	1-14 UNS-2A	1.8
	kg/mm						
AMFS4-F-M12	100-2,000	70	97.8	55.5	51-93.5	M12X1.75	0.5
AMFS4-F-M18	2,500; 5,000	80	103.5	55.5	57-99	M18X1.50	0.8
AMFS4-F-M24	10,000	100	143.5	75.0	81.5-138.5	M24X2.00	1.8

AVAILABLE OPTIONS

- Alloy Steel: AMF-F-xx
- 2Cr13 Stainless Steel: AMFSS-F-xx

FMFS4

Fixed Mounting Foot, 17-4PH and 304 Stainless Steel

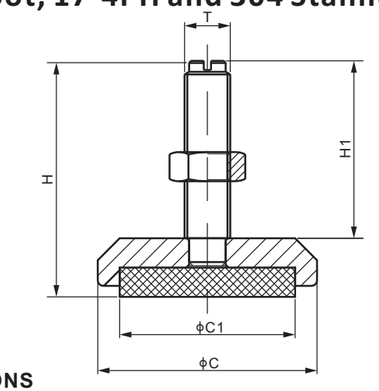

DIMENSIONS

PART NUMBER	RATED CAPACITY	C	C1	H	H1	T	Self Weight Approx.(kg)
	lb/mm						
FMFS460-1/2	500-SE5,000	60	48	64.5	48.5	1/2-20 UNF	0.3
FMFS470-3/4	5,000-10,000	70	58	76.0	58.0	3/4-16 UNF	–
	kg/mm						
FMFS460-M12	100-2,000	60	48	64.5	48.5	M12×1.75	0.3
FMFS470-M18	2,500-5,000	70	58	76.0	58.0	M18×1.50	–

AVAILABLE OPTIONS

- Alloy Steel: FMFxx-xx
- 2Cr13 Stainless Steel: FMFSSxx-xx

www.anyload.com
© 2025 ANYLOAD V1 dimensions and specifications subject to change without notice

AMFSS-F

Active Mounting Foot, 2Cr13 Stainless Steel

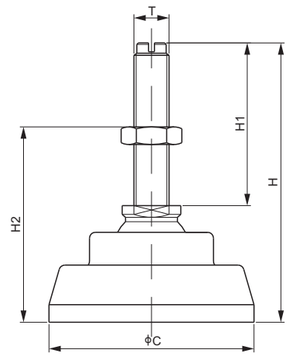

DIMENSIONS

PART NUMBER	RATED CAPACITY	C	H	H1	H2	T	Self Weight Approx.(kg)
	lb/inches						
AMFSS-F-1/2	100-4,000; SE5,000	2.76	3.85	2.19	2.01-3.68	1/2-20 UNF-2A	0.5
AMFSS-F-3/4	5,000-10,000	3.15	4.07	2.19	2.24-3.90	3/4-16 UNF-2A	0.8
AMFSS-F-1	15,000; 20,000	3.94	5.65	2.95	3.21-5.45	1-14 UNS-2A	1.8
	kg/mm						
AMFSS-F-M12	100-2,000	70	97.8	55.5	51-93.5	M12X1.75	0.5
AMFSS-F-M18	2,500; 5,000	80	103.5	55.5	57-99	M18X1.50	0.8
AMFSS-F-M24	10,000	100	143.5	75.0	81.5-138.5	M24X2.00	1.8

AVAILABLE OPTIONS

- Alloy Steel: AMF-F-xx
- 17-4PH and 304 Stainless Steel: AMFS4-F-xx

FMFSS

Fixed Mounting Foot, 2Cr13 Stainless Steel

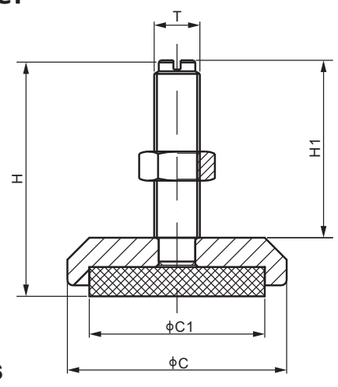

DIMENSIONS

PART NUMBER	RATED CAPACITY	C	C1	H	H1	T	Self Weight Approx.(kg)
	lb/mm						
FMFSS60-1/2	500-SE5,000	60	48	64.5	48.5	1/2-20 UNF	0.3
FMFSS70-3/4	5,000-10,000	70	58	76.0	58.0	3/4-16 UNF	–
	kg/mm						
FMFSS60-M12	100-2,000	60	48	64.5	48.5	M12×1.75	0.3
FMFSS70-M18	2,500-5,000	70	58	76.0	58.0	M18×1.50	–

AVAILABLE OPTIONS

- Alloy Steel: FMFxx-xx
- 17-4PH and 304 Stainless Steel: FMFS4xx-xx

© 2025 ANYLOAD V1 dimensions and specifications subject to change without notice

SBMP

Scale Base Mounting Plate, Mild Steel

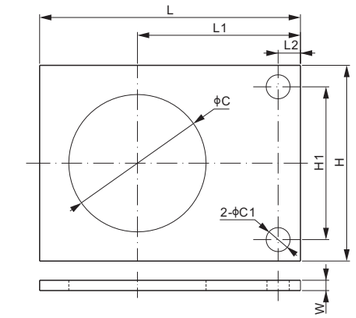

DIMENSIONS

PART NUMBER	C	C1	H	H1	L	L1	L2	W	Suggested Mounting Foot	Self Weight Approx.(kg)
mm										
SBMP-80	80	14	114	89	152	95	13	6	AMF-F-1/2 or AMF-F-M12	0.58
SBMP-90	90	14	114	89	152	95	13	6	AMF-F-3/4 or AMF-F-M18	0.51
inches (conversion of above dimensions)										
SBMP-80	3.15	0.55	4.49	3.50	5.98	3.74	0.51	0.24	AMF-F-1/2 or AMF-F-M12	0.58
SBMP-90	3.54	0.55	4.49	3.50	5.98	3.74	0.51	0.24	AMF-F-3/4 or AMF-F-M18	0.51

© 2025 ANYLOAD V1 dimensions and specifications subject to change without notice

SPACER; SPACERSS

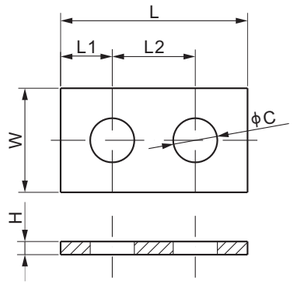

Alloy steel, SPACER

PART NUMBER	LOAD CELL CAPACITY *	DIMENSIONS C	H	L	L1	L2	W	Self Weight Approx.(kg)
	kg/mm							
SPACER-1/2	100-2,000	13.5	4	57.20	15.8	25.4	31.8	0.05
SPACER-3/4	2,500-5,000	19.8	4	76.20	19.1	38.1	38.1	0.07
SPACER-1	10,000	26.2	5	101.6	25.4	50.8	50.8	0.15
	lb/inch							
SPACER-1/2	100-SE5,000	0.53	0.16	2.25	0.62	1.00	1.25	0.11
SPACER-3/4	5,000; 10,000	0.78	0.16	3.00	0.75	1.50	1.50	0.15
SPACER-1	15,000; 20,000	1.03	0.20	4.00	1.00	2.00	2.00	0.33

** Refer to 563 series*

304 Stainless steel, SPACERSS

PART NUMBER	LOAD CELL CAPACITY *	DIMENSIONS C	H	L	L1	L2	W	Self Weight Approx.(kg)
	kg/mm							
SPACERSS-1/2	100-2,000	13.5	4	57.20	15.8	25.4	31.8	0.05
SPACERSS-3/4	2,500-5,000	19.8	4	76.20	19.1	38.1	38.1	0.07
SPACERSS-1	10,000	26.2	5	101.6	25.4	50.8	50.8	0.15
	lb/inch							
SPACERSS-1/2	100-SE5,000	0.53	0.16	2.25	0.62	1.00	1.25	0.11
SPACERSS-3/4	5,000; 10,000	0.78	0.16	3.00	0.75	1.50	1.50	0.15
SPACERSS-1	15,000; 20,000	1.03	0.20	4.00	1.00	2.00	2.00	0.33

** Refer to 563 series.*

www.anyload.com
© 2025 ANYLOAD V1 dimensions and specifications subject to change without notice

LOAD BARS

Load Bar, Alloy Steel

Complete Set Includes:

One set of loadbar consists of:

- 2 pieces of loadbars
- A separate junction box J02EP-1-17 equipped with two male connectors for connecting the two loadbars

Each loadbar consists of the followings:

- 2 units 563YH-2.5Klb load cells
- One junction box J02EP-17 built inside the loadbar
- 6m rodent protection cable with a female connector for connecting to the separate junction box J02EP-1-17
- Two units special made active mounting feet

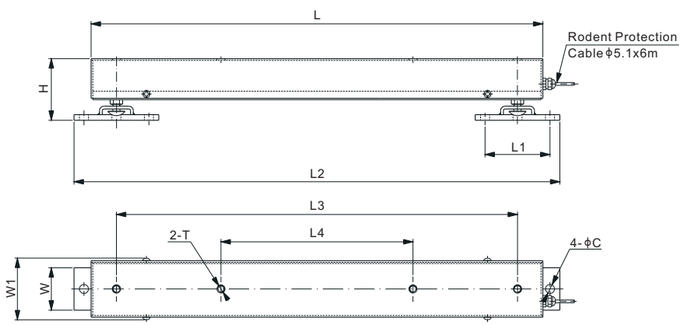

DIMENSIONS

MODEL NAME	RATED CAPACITY (a set of two load bars)	H	L	L1	L2	L3	L4	W	W1	C	T
LB100	lb/inches 500-4,000 (1K-10K)	4.17-4.57	31.50	4.53	33.86	27.95	13.39	2.95	4.33	0.63	1/2-20 Depth0.87
	kg/mm 100-2,000 (200-4,000)	106.0-116.0	800.0	115.0	860.0	710.0	340.0	75.0	110	16.0	1/2-20 Depth22

PART NUMBER

Load Cell Capacity	Part No.	Weight Approx. (kg)
2.5Klb	LB100-5Klb	35.7

www.anyload.com
© 2025 ANYLOAD V1 dimensions and specifications subject to change without notice

Alloy Steel, Load Bar (LB100) with Handheld Indicator (805HP)

Factory pre-calibrated, ready to use out of box

Complete Set Includes:

One set of load bar consists of:

- 2 pieces of load bars
- 1 unit of 805HP-03 (with two female connectors for connecting to the cables from the two bars)

Each bar includes:

- 2 units load cells (563YH-2.5Klb for LB100-5Klb)
- 1 junction box (J02EP-17 built-in inside of the bar)
- 1 roll of cable (rodent protection, 6m long, with a male connector for connecting to the hand-held indicator)
- 2 units active mounting feet (special made)

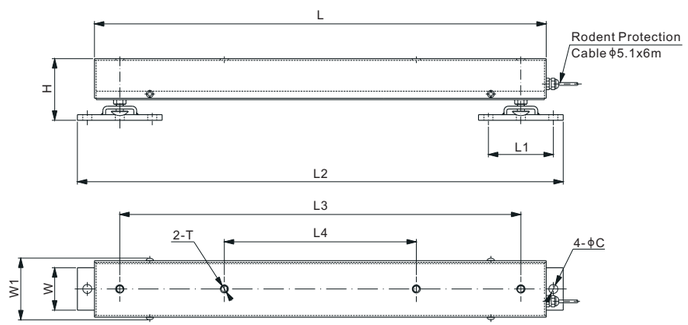

DIMENSIONS

MODEL NAME(one set)	RATED CAPACITY	H	L	L1	L2	L3	L4	W	W1	C	T
lb/inches 1,000-10,000	500lb-4,000lb	4.17-4.57	31.50	4.53	33.86	27.95	13.39	2.95	4.33	0.63	1/2-20 Depth0.87
kg/mm 100-2,000	200kg-4,000kg	106.0-116.0	800.0	115.0	860.0	710.0	340.0	75.0	110	16.0	1/2-20 Depth22

PART NUMBER

One Set Capacity	Load Cell Capacity	Part No.	Shipping Weight Approx. (kg)
5Klb	2.5Klb	LB100-5Klb-01-FP1	35.7

Note: for detailed information about 805HP-03, check the date sheet of 805HP

www.anyload.com
© 2025 ANYLOAD V1 dimensions and specifications subject to change without notice

SHACKLES, EYEBOLTS, ROD END

EYE; EYH

Eyebolt, Alloy Steel

EYE

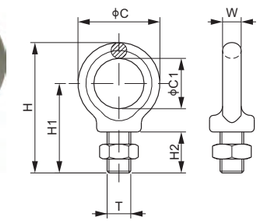

Features:

- Low carbon steel, casted, zinc plated
- One jam nut included

DIMENSIONS

PART NUMBER	T	C	C1	H	H1	H2	W	Safe Working Load	Self Weight Approx. (kg)
inches									
EYE-1/4	1/4-28 UNF	1.23	0.67	1.89	1.28	0.62	0.31	0.7Klb	0.05
EYE-B-1/4	1/4-28 UNF	1.00	0.50	1.73	1.20	0.65	0.27	0.65Klb	0.02
EYE-1/2	1/2-20 UNF	1.71	1.02	2.73	2.08	0.97	0.39	1.3Klb	0.1
EYE-3/4(Discontinue soon)	3/4-16 UNF	2.74	1.53	4.11	2.95	1.37	0.63	5.5Klb	0.4
mm									
EYE-M12	M12X1.75	43.5	26	69.5	53	24.5	11	0.6t	0.1

EYH

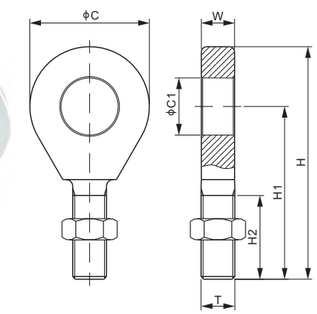

Features:

- Medium carbon steel, forged, zinc plated
- One jam nut included

DIMENSIONS

PART NUMBER	T	C	C1	H	H1	H2	W	Safe Working Load	Self Weight Approx. (kg)
inches									
EYH-3/4(Discontinued)	3/4-16 UNF	3.11	1.54	5.91	4.35	2.01	0.79	11Klb	0.8
EYH-DA-3/4	3/4-16 UNF	3.11	1.54	5.91	4.35	2.01	0.79	11Klb	0.8
EYH-1(Discontinue soon)	1-14 UNS	3.54	1.69	6.89	5.12	2.48	0.98	16.5Klb	1.4
EYH-1-1/4(Discontinued)	1-1/4-12 UNF	4.45	2.09	8.46	6.24	2.95	1.26	22Klb	2.7
EYH-DA-1-1/4	1-1/4-12 UNF	4.45	2.09	8.46	6.24	2.95	1.26	22Klb	2.7
mm									
EYH-M16	M16X2.0	79	39	150	110.5	51	20	2t	0.8
EYH-M18	M18X1.5	79	39	150	110.5	51	20	4t	0.8
EYH-M24	M24X2.0	90	43	175	130	63	25	7.5t	1.4
EYH-M30	M30X2.0	113	53	215	158.5	75	32	10t	2.7
EYH-M36	M36X2.0	124	62	238	176	90	40	18t	3.7
EYH-M42	M42X2.0	176	88	316	228	105	48	25t	3.8

VERTICAL LOAD

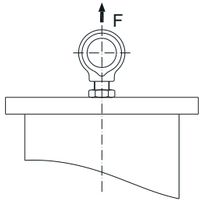

© 2025 ANYLOAD V1 dimensions and specifications subject to change without notice

RE; REH

Rod End, Alloy Steel

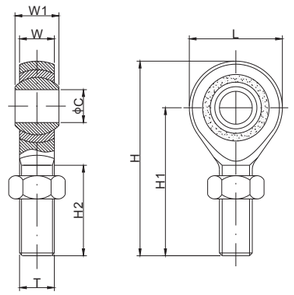

Features:

- Self-lubricating, maitenance free
- Durable low-carbon steel
- Helps achieve maximum accuracy of the load cell and extend service life
- Can be used in tension weigh module 101BHM2, 101NHM2, or mouting variation #2 (tension appication) of the 363YH

DIMENSIONS

PART NUMBER	C	H	H1	H2	L	W	W1	T	Safe Working Load	Shipping Weight (kg)
inches										
RE-1/4	0.25	1.90	1.50	0.95	0.80	0.25	0.38	1/4-28 UNF	500lb	0.1
RE-1/2	0.50	3.11	2.44	1.52	1.35	0.50	0.63	1/2-20 UNF	2Klb	0.1
RE-3/4	0.75	4.05	3.05	1.80	1.95	0.70	0.88	3/4-16 UNF	5Klb	0.3
REH-1/2	0.75	4.05	3.05	1.45	1.95	0.70	0.88	1/2-20 UNF	3Klb	0.3
REH-3/4	1.00	5.50	4.10	1.73	2.75	0.85	1.37	3/4-16 UNF	10Klb	0.8
REH-1	1.20	5.70	4.30	2.52	2.75	1.00	1.14	1-14 UNS	15Klb	0.9
mm										
RE-M6	5.9	46.0	36.0	21.5	20.0	6.75	9.0	M6	0.1t	0.1
RE-M12	12.0	70.0	53.5	31.0	32.0	12.0	16.0	M12	1.5t	0.1
RE-M16	16.0	86.0	66.0	37.0	40.0	15.0	21.0	M16	1.7t	0.2
RE-M18	18.0	95.5	72.0	41.0	46.0	16.5	23.0	M18X1.5	2t	0.3
RE-M24	25.0	124.0	94.0	57.0	60.0	22.0	31.0	M24X2.0	3t	0.6
RE-M30	30.0	145.0	109.5	62.5	70.0	24.5	37.0	M30X2.0	4.5t	1.0
REH-B-M12	20.0	103.0	77.5	28.0	51.0	12.0	16.0	M12	1.7t	–
REH-M18(Obsolete)	31.8	139.5	104.0	55.0	70.0	20.0	30.2	M18X1.5	5t	0.7
REH-B-M18	25.0	124.0	94.0	44.0	60.0	22.0	31.0	M18X1.5	5t	0.7
REH-B-M24	30.0	145.0	110.0	54.0	70.0	25.0	37.0	M24X2.0	5t	–

VERTICAL LOAD

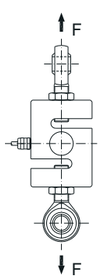

www.anyload.com
© 2025 ANYLOAD V1 dimensions and specifications subject to change without notice

RBXS

Shackle, Stainless Steel

Features:

- Work capacity: 1t; 5t
- Test load: 200% rated capacity
- Breaking load: 400% rated capacity
- Made of SS304 corrosion resistant material
- High tensile shackle, product meets ISO2415-2004

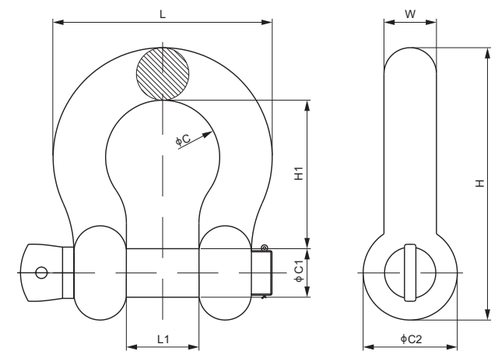

DIMENSIONS

PART NUMBER	C	C1	C2	H	H1	L	L1	W	Safe Working Load	Shipping Weight
mm										
RBXS-1t	45	12	24	85	55	68	25	12	1t	0.23kg
RBXS-5t	43	20	40	108.5	60.5	79	27	18	5t	0.75kg
inches (conversion of above dimensions)										
RBXS-1t	1.77	0.47	0.94	3.35	2.17	2.68	0.98	0.47	2.20Klb	0.51lb
RBXS-5t	1.69	0.79	1.57	4.27	2.38	3.11	1.06	0.71	11.02Klb	1.65lb

www.anyload.com
© 2025 ANYLOAD V1 dimensions and specifications subject to change without notice

SBX

Shackle, Alloy Steel

Features:

- ASME B30.26-2015(R2020) approval by the American Society of Mechanical Engineers
- Work capacity from 2t to 1250t
- Test load: 200% rated capacity
- Breaking load: 400% rated capacity

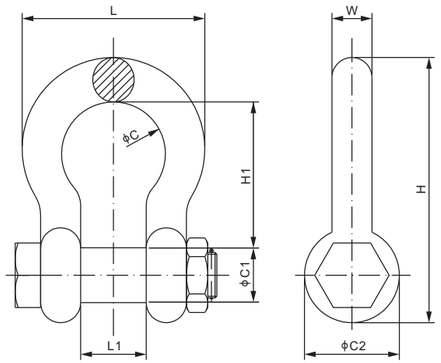

DIMENSIONS

PART NUMBER	C	C1	C2	H	H1	L	L1	W	Safe Working Load	Shipping Weight
mm										
SBX-2t	33	16	30	84	48	59	20.5	13	2t	0.32kg
SBX-3.25t	42.9	19.1	38.1	106	60.5	74.5	26.9	16	3.25t	0.65kg
SBX-4.75t	51	22.4	46	126	71.5	89	31.8	19.1	4.75t	1.02kg
SBX-6.5t	58	25.4	53	148	84	102	36.6	22.4	6.5t	1.62kg
SBX-9.5t	74	31.8	68.5	190	108	131	46	28.7	9.5t	3.75kg
SBX-12t	82.6	35.1	76.2	210	119	146	52	31.8	12t	4.62kg
SBX-13.5t	92	38.1	84	233	133	162	57	35.1	13.5t	6.38kg
SBX-17t	98.5	41.4	92	254	146	175	60.5	38.1	17t	9.43kg
SBX-25t	127	51	106	313	178	225	73	44.5	25t	13.16kg
SBX-35t	146	57	122	348	197	253	82.5	51	35t	23.70kg
SBX-55t	184	70	145	453	267	327	105	66.5	55t	44.57kg
SBX-85t	200	82.5	165	546	330	365	127	76	85t	69.85kg
SBX-120t	229	95.5	203	626	372	419	133	92	120t	120.2kg
SBX-150t	254	108	229	653	368	468	140	104	150t	153.32kg
SBX-200t	280	130	270	837	396	520	184	115	200t	237kg
SBX-300t	300	150	320	958	450	573	200	130	300t	363kg
SBX-500t	360	185	390	1192	557.5	706	240	165	500t	684kg
SBX-800t	440	240	493	1462	660	874	300	207	800t	1313kg
SBX-1000t	560	270	556	1698	780.5	1064	390	240	1000t	2024kg
SBX-1250t	560	300	620	1856	850	1106	400	260	1250t	2511kg
inches (conversion of above dimensions)										
SBX-2t	1.30	0.63	1.18	3.31	1.89	2.32	0.81	0.51	4.4Klb	0.71lb
SBX-3.25t	1.69	0.75	1.5	4.17	2.38	2.93	1.06	0.63	7.17Klb	1.43lb
SBX-4.75t	2.01	0.88	1.81	4.96	2.81	3.5	1.5	0.75	10.47Klb	2.25lb
SBX-6.5t	2.28	1	2.09	5.83	3.31	4.02	1.44	0.88	14.33Klb	3.57lb
SBX-9.5t	2.91	1.25	2.7	7.48	4.25	5.16	1.8	1.13	20.94Klb	8.27lb
SBX-12t	3.25	1.38	3.0	8.27	4.69	5.75	2.05	1.25	26.46Klb	10.19lb
SBX-13.5t	3.62	1.5	3.31	9.17	5.24	6.38	2.24	1.38	29.76Klb	14.07lb
SBX-17t	3.88	1.63	3.62	10	5.75	6.89	2.38	1.5	37.48Klb	20.79lb
SBX-25t	5	2.01	4.17	12.32	7.01	8.86	2.87	1.75	55.12Klb	29.01lb
SBX-35t	5.75	2.24	4.8	13.7	7.76	9.96	3.25	2.01	77.16Klb	52.25lb
SBX-55t	7.24	2.76	5.71	17.83	10.51	12.87	4.13	2.62	121.25Klb	98.26lb
SBX-85t	7.87	3.25	6.5	21.5	12.99	14.37	5	2.99	187.39Klb	153.99lb
SBX-120t	9.02	3.76	7.99	24.65	14.65	16.5	5.24	3.62	264.55Klb	265.0lb
SBX-150t	10	4.25	9.02	25.71	14.49	18.43	5.51	4.09	330.69Klb	338.01lb
SBX-200t	11.02	5.12	10.63	32.95	15.60	20.47	7.24	4.53	440.9Klb	522.5lb
SBX-300t	11.81	5.91	12.60	37.72	17.72	22.56	7.87	5.12	661.4Klb	800.3lb
SBX-500t	14.71	7.28	15.35	46.93	21.95	28.93	9.45	6.50	1102.3Klb	1508lb
SBX-800t	17.32	9.45	19.41	57.55	25.98	34.41	11.81	8.15	1763.7Klb	2894.7lb
SBX-1000t	22.05	10.63	21.89	65.85	30.73	41.89	15.35	9.45	2204.6Klb	4462.2lb
SBX-1250t	22.05	11.81	24.41	73.07	33.46	43.54	15.75	10.23	2755.8Klb	5535.8lb

Remark: L1 has a tolerance of +/-2mm for L1≦ 43mm, +/-3mm for 46mm≦L1≦60.5mm , +/-4mm for 73mm≦L1≦82.5mm, and +/-5mm for 105mm≦L1≦140mm

© 2025 ANYLOAD V1 dimensions and specifications subject to change without notice

TBX

Shackle, Alloy Steel

Features:

- High tensile bolt type anchor shackle, quality meets ISO2415-2004
- Working Load Limit(WLL) permanently engraved on each shackle
- Each shackle proof tested to 2.0 times the Working Load Limit
- Breaking load: 4.0 times of Working Load Limit

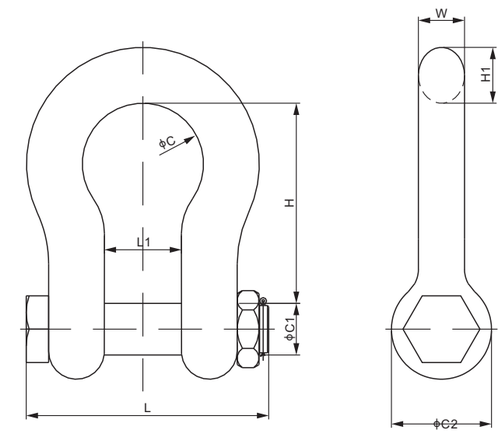

DIMENSIONS

PART NUMBER	C	C1	C2	H	H1	L	L1	W	Safe Working Load Limit	Shipping Weight
mm										
TBX-2t	26	12	23	36.5	9.5	54	17	9.5	2t	0.13kg
TBX-2.5t	29.5	14	27	43	11	62	19	11	2.5t	0.22kg
TBX-3.25t	33	16	30	48	13	71.5	20.5	13	3.25t	0.31kg
TBX-5t	43	20	38	60.5	17.5	89	27	16	5t	0.72kg
TBX-7t	51	22	46	71.5	20.5	105	32	19	7t	1.10kg
TBX-9.5t	58	27	53	84	24.5	121	36.5	22.5	9.5t	1.76kg
TBX-12.5t	68.5	30	60.5	95	27	136.5	43	25.5	12.5t	2.58kg
TBX-15t	74	33	68.5	108	32	150.5	46	29.5	15t	3.70kg
TBX-18t	82.5	36	76	119	35	166.5	51.5	33	18t	5.06kg
TBX-21t	92	39	84	133.5	38	181	57	36	21t	6.70kg
TBX-30t	98.5	42	92	146	41	196.5	60.5	39	30t	8.42kg
TBX-40t	127	52	106.5	178	57	239	73	47	40t	14.22kg
TBX-50t	146	60	122	197	61	266.5	82.5	53	50t	23.3kg
TBX-80t	184	72	144.5	267	79.5	344	105	69	80t	42.12kg
TBX-110t	200	85	165	330	92	400	127	76	110t	74.8kg
inches (conversion of above dimensions)										
TBX-2t	1.02	0.47	0.91	1.44	0.37	2.13	0.67	0.37	4.41Klb	0.29lb
TBX-2.5t	1.16	0.55	1.06	1.69	0.43	2.44	0.75	0.43	5.51Klb	0.49lb
TBX-3.25t	1.30	0.63	1.18	1.89	0.51	2.81	0.81	0.51	7.17Klb	0.68lb
TBX-5t	1.69	0.79	1.50	2.38	0.69	3.50	1.06	0.63	11.02Klb	1.59lb
TBX-7t	2.01	0.87	1.81	2.81	0.81	4.13	1.26	0.75	15.43Klb	2.43lb
TBX-9.5t	2.28	1.06	2.09	3.31	0.96	4.76	1.44	0.89	20.94Klb	3.88lb
TBX-12.5t	2.70	1.18	2.38	3.74	1.06	5.37	1.69	1.00	27.56Klb	5.69lb
TBX-15t	2.91	1.30	2.70	4.25	1.26	5.93	1.81	1.16	33.07Klb	8.16lb
TBX-18t	3.25	1.42	2.99	4.69	1.38	6.56	2.03	1.30	39.68Klb	11.16lb
TBX-21t	3.62	1.54	3.31	5.26	1.50	7.13	2.24	1.42	46.30Klb	14.77lb
TBX-30t	3.88	1.65	3.62	5.75	1.61	7.74	2.38	1.54	66.14Klb	18.56lb
TBX-40t	5.0	2.05	4.19	7.01	2.24	9.41	2.87	1.85	88.18Klb	31.35lb
TBX-50t	5.75	2.36	4.80	7.76	2.40	10.5	3.25	2.09	110.23Klb	51.37lb
TBX-80t	7.24	2.83	5.69	10.5	3.13	13.5	4.13	2.72	176.37Klb	92.86lb
TBX-110t	7.87	3.35	6.50	13.0	3.62	15.7	5.0	2.99	242.51Klb	164.91lb

© 2025 ANYLOAD V1 dimensions and specifications subject to change without notice

TEST WEIGHTS

ANYLOAD

ANYLOAD

TWS

Test Weight, Stainless Steel

Whole Set
Class F1

Capacity Range	Part Number
0.05g - 1g	TWSF1-(0.05g-1g)
1g - 1kg	TWSF1-(1g-1kg)

Class M1

Capacity Range	Part Number
1g - 1kg	TWSM1-(1g-1kg)

(0.05g-1g) Whole set contents:

Capacity	Quantity
0.05g	1
0.1g	1
0.2g	2
0.5g	1
1g	1

(1g-1kg) Whole set contents:

Capacity	Quantity
1g	1
2g	2
5g	1
10g	1
20g	2
50g	1
100g	1
200g	2
500g	1
1kg	1

Individual Packing
Class F1

Capacity	Part Number
1g	TWSF1-1g
2g	TWSF1-2g
5g	TWSF1-5g
10g	TWSF1-10g
20g	TWSF1-20g
50g	TWSF1-50g
100g	TWSF1-100g
200g	TWSF1-200g
500g	TWSF1-500g
1kg	TWSF1-1kg
2kg	TWSF1-2kg
5kg	TWSF1-5kg
10kg	TWSF1-10kg
20kg	TWSF1-20kg

TWC

Test Weight, Cast Iron

Individual Weights
Class M1

Capacity	Part Number
5kg	TWCM1-02-5kg
10kg	TWCM1-02-10kg
20kg	TWCM1-02-20kg
25kg	TWCM1-02-25kg
50kg	TWCM1-02-50kg
25lb	TWCM1-25lb
50lb	TWCM1-50lb

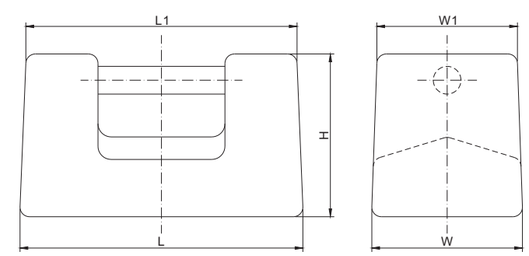

DIMENSIONS

RATED CAPACITY	L	L1	W	W1	H
kg/mm					
5	150	143	80	74	86
10	190	188	95	93	110
20	231	225	117	112	143
25	239	225	122	114	167
50	310	305	157	155	195
lb/inches					
25	6.5	5.8	4.4	4.0	4.6
50	8.5	7.9	5.4	4.9	5.8

© 2025 ANYLOAD V1 dimensions and specifications subject to change without notice

TWC-MC

Test Weight, Cast Iron

Features:

- 1-piece casting (the grip handle & body in one piece), safe and solid
- Embedded adjusting cavity for sealing, reliable and convenient
- Nominal value marked on the surface
- Flat top for easy and secure stacking, sloped-sloth space to prevent rainwater and dust accumulation
- Wide slot space to fit most fork lifts
- Smooth surface, durable coat of paint to protect from weather
- Embossed marking, easy to clean and maintain

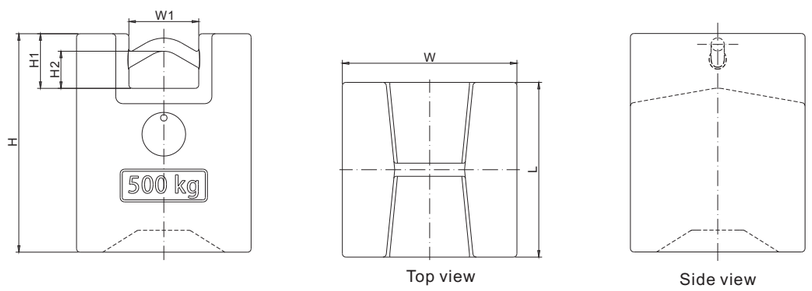

DIMENSIONS

RATED CAPACITY	H	H1	H2	L	W	W1
kg/mm						
500	500	125	85	400	400	160
lb/inches (conversion of above dimensions)						
1102.3	19.7	4.9	3.3	15.7	15.7	6.3

PART NUMBER

Rated Capacity	Class	Part No.
500kg.....	OIML M1.....	TWCM1-500kg-MC

www.anyload.com
© 2025 ANYLOAD V1 dimensions and specifications subject to change without notice

APPENDICES

ANYLOAD

Load cells & Modules naming system

ANYLOAD

101..... S-Beam

102..... Double Ended Beam

106..... Canister

107..... Force Measurement

108..... Single Point

110..... Tension Link

202..... Planar

247..... Load Button

266..... Bottom Blind Hole Spoke

276..... Upper Blind Hole Spoke

363..... Tension&Compression Spoke

535..... Load Pin

563..... Single Ended Beam

651..... Single Point-Triple Beam

M1..... Weigh Module

M2..... Weigh Module

SE..... Small Envelop

LE..... Large Envelop

L1..... Longer

L2..... Longer

W1..... Wider

W2..... Wider

B1..... Longer & Wider

B2..... Longer & Wider

T1..... Special Design

T2..... Special Design

GS..... Glue Seal

WS..... Welded-seal

UN..... Imperial Thread with Metric Load

A..... Aluminium

H..... Alloy Steel

S..... Stainless Steel

P..... Plastic

20..... Sensitivity=2.0mV/V

25..... Sensitivity=2.5mV/V

30..... Sensitivity=3.0mV/V

FOR EXAMPLES

a).

101 B S W1

- 101 → Model Series: 101 Series S-beam
- B → Structural Code
- S → Material/Finish: Stainless Steel
- W1 → Special Design: Wider

b).

563 Y H M1

- 563 → Model Series: 563 Series Single ended beam
- Y → Structural Code
- H → Material/Finish: Alloy Steel
- M1 → Weigh Module

www.anyload.com
© 2025 ANYLOAD V1 dimensions and specifications subject to change without notice

ANYLOAD Suggested Rod End or Eye Bolt for 101 Series

Load Cell Model	Capacity	Thread Hole	Suggested Rod End or Eye Bolt
101AH	1kg...30kg	M6x1	RE-M6
101BH	50kg...500kg	M12x1.75	RE-M12 or REH-M12 or EYE-M12
101BH	1t...1.5t	M12x1.75	RE-M12 or REH-M12
101BH	SE2t	M12x1.75	NONE
101BH	2t	M18x1.5	RE-M18 or EYH-M18
101BH	3t	M18x1.5	EYH-M18
101BH	5t	M18x1.5	NONE
101BH	10t	M30x2	EYH-M30
101BS	500lb...1Klb	1/2-20 UNF	RE-1/2 or REH-1/2 or EYE-1/2
101BS	1.5Klb...2Klb	1/2-20 UNF	RE-1/2 or REH-1/2
101BS	2.5Klb...3Klb	1/2-20 UNF	REH-1/2
101BS	5Klb	3/4-16 UNF	RE-3/4 or EYE-3/4 or EYH-DA-3/4
101BS	10Klb	3/4-16 UNF	EYH-DA-3/4
101BS	15Klb	1-14 UNS	EYH-1
101BS	20Klb	1-1/4-12 UNF	EYH-DA-1-1/4
101BS	300kg-500kg	M12X1.75	RE-M12 or REH-M12 or EYE-M12
101BS	1t	M12X1.75	RE-M12 or REH-M12
101BS	2t	M16X2	EYH-M16
101BS	3t	M16X2	NONE
101BS	5t	M24X2	EYH-M24
101BS	10t	M30X2	EYH-M30
101NH	50lb...250lb	1/4-28 UNF	RE-1/4 or EYE-1/4, EYE-B-1/4
101NH	500lb...1Klb	1/2-20 UNF	RE-1/2 or REH-1/2 or EYE-1/2
101NH	1.5Klb...2Klb	1/2-20 UNF	RE-1/2 or REH-1/2
101NH	2.5Klb...3Klb	1/2-20 UNF	REH-1/2
101NH	5Klb	3/4-16 UNF	RE-3/4 or EYE-3/4 or EYH-DA-3/4
101NH	10Klb	3/4-16 UNF	EYH-DA-3/4
101NH	15Klb	1-14 UNS	EYH-1
101NH	20Klb	1-1/4-12 UNF	EYH-DA-1-1/4
101NSGS	50lb...250lb	1/4-28 UNF	RE-1/4 or EYE-1/4, EYE-B-1/4
101NSGS	500lb...1Klb	1/2-20 UNF	RE-1/2 or REH-1/2 or EYE-1/2
101NSGS	1.5Klb...2Klb	1/2-20 UNF	RE-1/2 or REH-1/2
101NSGS	2.5Klb...3Klb	1/2-20 UNF	REH-1/2
101NSGS	5Klb	3/4-16 UNF	RE-3/4 or EYE-3/4 or EYH-DA-3/4
101NSGS	10Klb	3/4-16 UNF	EYH-DA-3/4
101NSGS	15Klb	1-14 UNS	EYH-1
101NSGS	20Klb	1-1/4-12 UNF	EYH-DA-1-1/4
101RS	100N...750N	M6X1	RE-M6

www.anyload.com
© 2025 ANYLOAD V1 dimensions and specifications subject to change without notice

PRODUCTS GROSS WEIGHT

UNIT: kg

Single Ended Beams

563FSAS	2.5Klb	1.10
563RS	5; 10; 20; 30; 50; 100; 200; 350; 500kg	0.60
563SH	25; 50lb	0.26
	100; 150; 200; 250; 500lb	0.47
563SHBB	50;100lb	0.93
	200; 250; 500lb; 1Klb	1.00
	2.5Klb	3.53
563WS	1.25Klb	2.2
	2.5Klb	3.0
	5Klb	6.0
	10Klb	7.0
	25Klb	15.5
563WS30	37.5Klb	18.5
	50Klb	21.0
	60; 75Klb	26.0
563WS-WBL	1.25Klb	2.25
563YA	200; 300lb	0.60
563YH	100lb…4K; SE5Klb / 100kg…2t	1.00
	LE2.5Klb	1.70
	5K; 10Klb / 2.5t…5t	1.80
	15K; 20Klb / 10t	4.00
	20t	5.60
563YH-23	250; 500; 750lb; 1; 1.5; 2; 2.5; 4; SE5Klb	1.00
	5K; 10Klb	1.80
	15K; 20Klb	4.00
563YHFK	125kg; 250kg	0.70
	500kg; 1t	1.00
	2.5t	2.80
	5t	3.00
	10t	4.90
563YHMS	1K; 3K; 5Klb	2.50
	10Klb	3.80
	20Klb; 30Klb	7.50
563YHRT	1K; 2.5K; 4Klb	1.00
	5K; 10Klb	1.70
563YS	500lb…4Klb; SE5Klb / 250kg…2t	1.00
	5K; 10Klb / 3t; 5t	1.80
	15K; 20Klb / 10t	4.10
563YS30	500lb…4Klb; SE5Klb	1.00
	5K; 10Klb	1.80
	15K; 20Klb	4.10
563YSBK; 563YSBKUN	200kg; 500kg	0.40
	1t	0.60
	2t	0.80
563YSLB	500lb; 1K; 2.5Klb	0.70
563YSLF	2.5Klb	1.70
	5Klb	2.50
563YSMT	250; 500lb; 1.25K; 2.5K; 4Klb	1.00
	5Klb	1.30
	10Klb	2.00
563YSMT-4	5kN; 10kN; 20kN	1.20
563YSRS	1K; 2K; 5Klb	2.00
563YSSB	2.5Klb	2.30
	5Klb	2.40
	10Klb	4.00
	20Klb	4.80

Double Ended Beams

102AH	5t; 10t; 15t	16.4
	20t; 25t; 30t	16.7
	50t	30.7
102BH	10K	2.90
	20K; 25Klb / 5t; 10t; 15t	3.00
	40Klb / 20t	7.00
	50K; 60K; 75Klb / 25t; 30t; 35t	9.00
	SE100K	10.0
	100K; 125Klb / 50t	20.5
102BH	200Klb	47.0
	300Klb	75.0
	400Klb	80.5
102BS	10K; 20K; 25Klb	2.90
	50K; 60K; 75Klb	8.00
102DH	5K	2.40
	10K; 15K; 20Klb	2.70
	30K; 40K; 50K; 60K; 75Klb	9.00
	100Klb	12.1
	150Klb	18.3
	200Klb	38.0
102DS	5K	2.40
	10K; 15K; 20Klb	2.70
	30K; 40K; 50K; 60K; 75Klb	9.00
	100Klb	12.1
	150Klb	18.3
	200Klb	38.0
102EH	1K; 1.5K; 2.5K; 5Klb	1.70
	10K; 15K; 20K; 25Klb	2.90
	35Klb	3.90
	50K; 60K; 75Klb	11.3
	100K; 125Klb	23.0
	200Klb	48.0
	300Klb	50.0
102EHEL	40K; 50Klb	5.40
102ES	2.5K; 5Klb	1.70
	10K; 15K; 25Klb	2.90
	35Klb	3.60
	50K; 60K; 75Klb	10.5
102FS	50Klb	5.40
	75Klb	5.80
102MH	25t	19.4
102MHML	25Klb	18.8
102RH	10t; 15t	4.00
	50K; 65K; 75K; 100Klb	8.60
	125Klb	9.20
102RHGT	60K	6.40
102TH	25Klb	4.90
	40Klb	5.20
	SE50K; SE60Klb	6.00
	SE75Klb	6.10
	50K; 60Klb	8.30
	75Klb	8.50
	100K; 125Klb	21.1

S–Beams

101AH	1; 2; 3; 5; 10; 20; 30kg	0.90
101BH	50; 100; 200kg	0.60
	300; 500kg; 1t; SE2t	0.80
	2t; 3t; 5t	1.50
	10t	7.40
101BS	500lb…3Klb / 300kg…1t	0.80
	5Klb / 2t; 3t	1.50
	10Klb / 5t	1.70
	15Klb	2.90
	20Klb / 10t	7.00
101NH	50; 100; 200; 250; 300lb	0.60
	500lb	0.70
	750; 1K; 1.5K; 2K; 2.5K; 3Klb	0.90
	5K; 10Klb	1.50
	15Klb	3.00
	20Klb	6.80
101NH-LE	5K; 10Klb	1.50
101NSGS	50; 100; 250lb	1.10
	500lb	1.50
	1K; 2K; 2.5K; 3Klb	1.80
	5K; 10Klb	2.90
	15Klb	6.60

www.anyload.com
© 2025 ANYLOAD V1 dimensions and specifications subject to change without notice

APPENDICIES

PRODUCTS GROSS WEIGHT

UNIT: kg

S–Beams

101NSGS	20Klb	15.0

Canisters & Disks (cup not included)

106BH	100t	9.60
	200t	28.7
	300t	37.8
	500t	77.0
	800t; 1000t	116.6
106CS; 106CS20	10K; 25K; 50Klb / 10t; 15t; 25t	2.90
	100Klb / 40t; 50t	6.00
	200Klb / 100t	12.5
106ES	50Klb	3.60
	100Klb	4.10
106HS	20t; 30t; 40t	3.80
106HSCP	35t	6.90
106KS	50Klb	6.30
	100Klb	13.4
106MS-F-YZ	500kg; 1t; 2t; 1K; 2.5; 5Klb	1.00
	5t / 10Klb	1.50
	10t / 20Klb	2.60
106PS; 106PS20	50Klb	3.83
	100Klb	7.10
106RS	30t	4.20
	40t	3.90
	50t	5.20
	100t	6.20
106RS-FB	LE50Klb	3.50
106TS	50Klb	4.20
	100Klb	4.40
	30t	5.80
	SE30t	3.70
	SE50t	3.50
266AA	25; 50kg	0.30
266AH	100; 200; 300; 500kg; 1t; 2t	0.50
	3t; 5t; 10t	2.40
	20t	4.20
	30t	8.30
266AS	100; 200; 250; 500kg; 1t; 2t	0.50
	5t	2.40
	10t	2.70
	20t	4.20
	30t	8.30
266ASPT	5t	1.70
	10t	1.90
276EH (cup included)	5t	0.60
	10t	0.90
	25t	1.80
	50t	4.20
	100t	8.70
363HHAN	60t	9.60
363YH	1t; 2t; 3t; 5t	2.80
	10t; 20t	5.50
	30t	12.4
	50t	16.8
	100t	40.6
	150t; 200t	51.0
	300t	97.2

Single Points

108AA	0.1; 0.2; 0.3; 0.5; 1; 2; 3; 5kg	0.10
108AA3MUN	3; 5; 10; 15; 20; 30; 50; 90kg	0.50
108BA	3; 6; 7; 10; 15; 20; 30; 35; 40kg	0.20
	50; 60; 75kg	0.26
	100; 150kg	0.35
108BATD	3; 5; 7; 10; 15; 20; 30; 50; 100kg	0.30

Single Points

108CA	10; 20; 30; 60; 100; 150; 200; 250; 300kg	1.50
	500; 600; 750kg; 1t	1.60
108DA	500; 800kg; 1t; 1.5t; 2t	3.60
108EA	30; 60; 100; 150; 200; 300kg	0.53
108HAUN	50; 100; 250; 635kg; 1t	1.30
108JA	20kg	0.40
	50; 60; 75; 100kg	0.50
	LE60; LE75; LE100; SE150; SE200; SE300; SE400kg	0.70
	150; 200; 300; 400; SE600kg	1.10
	500; 750kg; 1t; 1.5t	2.50
	2t	2.60
108JA-21	30; 50; 75; 100; 150kg	0.60
108KS; 108KSUN	4; 7; 10; 15; 20; 30; 50; 75; 100; 150kg	0.65
108LAMT	30; 50; 60; 100;150; 200; 300kg	0.60
108LSMT	30; 50; 100kg	1.40
	200; 300kg	1.50
108MA; 108MAUN	50; 75; 100; 150; 200; 250; 300; 500; 635; 660; 1000kg	1.90
108PA	0.2; 0.3; 0.6; 1; 2; 3; 6kg	0.10
108QSFL	250lb	2.60
108QS	6; 10; 15; 25; 50; 100lb	1.00
	200lb	1.20
	500lb	3.00
	1Klb	3.10
108SA	6; 10; 15; 20; 30kg	0.10
108TA; 108TAUN	3; 5; 7; 10; 15; 20; 30; 50; 75; 100; 150; 200kg	0.40
108TAAD	30; 60; 150kg	0.50
108TAAL	30; 60; 100; 150kg	1.20
108TAYM; 108TAYM-01	75; 150; 300kg	1.00
108TS;	5; 10; 15; 20kg	0.90
108TSUN	30; 50; 75; 100; 150kg	1.00
108TSLL	7; 10; 15; 30; 60; 100; 150kg	0.70
108TSST	10; 15; 25; 50; 100lb	0.90
108TSVS	50; 100; 200; 400; 500lb	1.80
	1Klb	2.60
108UA; 108UAUN	30; 50; 100; 150; 200; 300; 500; 635; 700kg; 1t; 1.5t	2.70
108WH	300; 400; 500; 750kg; 1t	2.70
108WSLP	150kg	2.30
651AA	10; 15; 30; 50; 100kg	0.50
651HS	6; 12; 20; 30kg	0.90
	50; 60kg	1.10
651JS	50; 75kg	2.10
	200; 400kg	2.20
651KS22	50; 100; 250; 500kg	2.30
651KSGS	100; 250; 500kg	2.50
651KS55UN	50; 75; 100; 150; 200; 250; 300; 500kg	4.70
651KS66	LE10; LE20; LE50; LE100; LE200kg	1.32
651KSBC; 651KSBCUN	100kg	6.20
	250kg	6.30
	500kg	6.50
651KSCS	60; 100; 150; 200; 250; 300; 500; 600; 750kg; 1t	4.00
651TA; 651TAUN	10; 15; 20; 30; 50; 75; 100; 200kg	0.50

Planars

202UA	3.75; 7.5; 15; 37.5; 75kg	0.10
	150kg	0.20
	375kg	0.40
202WA	12.5; 18.75; 25; 37.5lb	0.10
	50; 100; 200lb/ 100; 200; 300kg	0.20
202WH	250kg	0.20

APPENDICIES

www.anyload.com
© 2025 ANYLOAD V1 dimensions and specifications subject to change without notice

PRODUCTS GROSS WEIGHT

UNIT: kg

Load Pins

535TS	2t; 5t	0.80
	10t	2.10
	20t	4.60
	40t	11.2
	70t	20.0
	100t	30.0

Tension Links

110BH	1t	0.20
	2t	0.40
	5t	0.80
	10t	2.40
	20t	5.40
	30t	9.30
	50t	22.0
	75t	35.4
	100t	54.8
	120t	61.0
110ES-WL-HP	1t; 2.5t	1.70
	5t	2.10
	10t	3.50
	20t	6.60
	30t	10.5
	50t	21.0
	100t	53.0
110RH (Cable included)	0.5t; 1t; 2t	0.80
	3t	1.20
	5t	2.10
	10t	2.40
	20t	4.40
	30t	6.40
	50t	13.9
	100t	32.7
110RH-ST (Cable included)	0.5t; 1t; 2t	1.10
	3t	1.30
	5t	2.00
	10t	2.50
	20t	4.00
110RH-WL	0.5t; 1t; 2t	0.60
	3t	1.00
	5t	1.40
	10t	2.30
	20t	4.70
	30t	5.50
	50t	16.0
	100t	35.0
110ZHBL	534-1.5t	0.20
	634-2.5t; 634-2.5Klb	0.30

Force Measurement

101AALS	2.2; 5; 10; 25; 50; 100lb	0.10
101ASLS	200; 300; 500lb	0.30
101RS	100; 250; 500; 750N	0.20
101RSLS	250g; 1; 2; 5; 10; 25; 50; 100lb	0.10
107CH	10kN; 20kN	2.20
	50kN	3.50
	100kN	5.20
	200kN	8.50
112BA	20; 50in-oz; 12; 50; 100in-lb; 0.14; 0.35; 1.5; 5.6; 11.3Nm	0.07
247AA	1; 2; 5; 10; 20kg	0.07
247AS	30; 50; 100; 150kg	0.07
	200; 500kg; 1t;	0.11
	5t	0.21
247ASLL	5; 10Klb	0.40

Force Measurement

247ASLH; 247ASLHUN	10; 25; 50; 100kg	0.09
	250; 500kg	0.11
	1; 2t	0.19
	5; 10t	0.42
247BS	30; 50; 100kg	0.13
247BSWM	10lb	0.10
	25; 50; 100; 250; 500; 1000lb	0.12
	2; 3; 5Klb	0.20
	7.5; 10Klb	0.40
296AS	50; 100; 500N; 5kN	0.03
	20kN	0.11
	50kN	0.25
	100; 200kN	0.90

Weigh Modules (load cell not included)

101BHM2	50kg-1.5t	1.30
	2t	3.20
101NHM2	(50-250)lb	0.40
	(0.5-2)Klb	1.40
	5Klb	3.20
	10Klb	8.50
MK4-101NHM2	(50-250)lb	2.80
	(0.5-2)Klb	6.80
	5Klb	14.0
	10Klb	35.2
101NHM3	(0.5-3)Klb	2.00
	(5-10)Klb	3.90
102BHM1	(10-25)Klb / (5-15)t	21.7
	(50-75)Klb / (25-35)t	41.0
	SE100Klb	42.5
	200Klb	450.0
102BSM5	(50-75)Klb	45.3
102DHM3	(5-20)Klb	13.0
	(30-75)Klb	38.8
	100K; 150Klb	62.0
	(200-250)Klb	150.0
102DSM3	(5-20)Klb	13.0
	(30-75)Klb	38.8
	100K; 150Klb	62.0
	(200-250)Klb	150.0
102EHM2	(1-5)Klb	7.70
	(10-25)Klb; 35Klb	30.0
	(50-65)Klb	67.5
MK4-102EHM2	2.5; 5Klb	39.0
	10; 15; 25Klb	133.0
	35Klb	137.0
	50; 60Klb	316.0
102ESM2	(1-5)Klb	7.70
	(10-25)Klb; 35Klb	30.0
	(50-60)Klb	67.5
102THM5	(50-75)Klb	69.5
106MHM1	(1-2.5)Klb / (0.5-1)t	1.38
110BHM3	1t	0.60
	2t	1.20
	5t	3.00
	10t	6.40
276EHM1	25t	17.3
	50t	27.8
	100t	49.5
363TSM1	(0.5-1.2)t/(1-2.5)Klb	1.30
	(2.5-5)t/(5-10)Klb	2.20
	(12-25)t/(25-50)Klb	4.00
	50t/100Klb	13.0
	100t/200Klb	25.0
MK4-363TSM1	2.5Klb	9.30
	5; 10Klb	14.1

APPENDICIES

www.anyload.com
© 2025 ANYLOAD V1 dimensions and specifications subject to change without notice

PRODUCTS GROSS WEIGHT

UNIT: kg

Weigh Modules (load cell not included)

535AHM2	5t	1.20
	10t	3.60
	15t	5.40
	20t	9.20
	30t	7.40
	50t	17.0
	100t	63.0
563RSM5	(5-200)kg	2.04
MK4-563RSM5	10; 20; 50; 100; 200; 500kg	12.0
563YHM2	(0.1-SE5K)lb / (100kg-2t)	9.10
	(5-10)Klb / (3-5)t	11.0
563YHM4-02	(0.1-SE5)Klb / (100kg-2t)	4.20
	(5-10)Klb / (3-5)t	9.80
	(15-20)Klb / 10t	20.5
MK4-563YHM4	100; 250; 500lb; 1; 2; 2.5; 4; SE5Klb	22.0
	5; 10Klb	25.0
563YSM3-02	(0.5-SE5)Klb / (250kg-2t)	4.20
	(5-10)Klb / (3-5)t	9.50

Amplifiers

A1A		0.17
A1A-D25		0.15
A2A		0.50
A2P		0.20

Junction Boxes

J02S-23-MB		0.30
J04EA-16; J04SA-16		0.50
J04ES-E; J04SS-E		0.70
J04ES/SS		0.70
J04ES-FS; J04SS-FS		0.50
J04EP-E; J04SP-E		1.50
J06ES/SS		0.90
J06S-E-21-MB		0.30
J08ES/SS		1.00
J08EP-E; J08SP-E		2.50
J12ES/SS		1.12

Indicators

805BS		2.30
805HP		0.54
805HP-WL		0.36
805TS		2.30
808AH		9.00
808BH		14.00
808CH		6.40
815BS		2.50
815TS		2.30

Hardware & Accessories

QS1	500lb; 1K; 2.5K; 4K; SE5Klb	7.90
	5K; 10Klb / 3t; 5t	11.7
	500kg; 1t; 1.5t; 2t	8.10
QS3	500lb; 1K; 2.5K; 4K; SE5Klb / 250; 500kg; 1t; 2t	7.60
	5K; 10Klb / 3t; 5t	11.4
QS5	500lb; 1K; 2.5K; 4K; SE5Klb	7.60
	5K; 10Klb	11.4

Hardware & Accessories

QS3-S4	500lb; 1K; 2.5K; 4K; SE5Klb / 250; 500kg; 1t; 2t	7.60
	5K; 10Klb / 3t; 5t	11.4
QS5-S4	500lb; 1K; 2.5K; 4K; SE5Klb	7.60
	5K; 10Klb	11.4
FSP-TA	4'×4'	120.0
FSP	3'×3'	72.0
	4'×4'	120.0
	5'×5'	200.0
	4'×6'	180.0
	5'×7'	260.0
FSP-GI	4'×4'	138.0
FSP-HD	4'×4'	190.0
FSP-GH	4'×4'	185.0
FSP-SS-S4	3'×3'	75.0
	4'×4'	120.0
	5'×5'	200.0
RAMP-17	3'×3'	50.9
	4'×3'	61.0
	4'×4'	81.0
	5'×4'	103.0
BG-48		21.6
LB100	5Klb	35.7
LB100-FP1	5Klb	35.7
AMF-F; AMFSS-F; AMFS4-F	M12; 1/2	0.50
	M18; 3/4	0.80
	M24; 1-14 UNS	1.80
FMF; FMFSS; FMFS4	M12; 1/2	0.30
REH	1/2	0.30
	M18	0.70
	3/4	0.80
	1-14 UNS	0.90
RE	M6; M12; 1/4; 1/2	0.10
	M16	0.20
	M18; 3/4	0.30
	M24	0.60
	M30	1.00
EYE	M12; 1/4; 1/2	0.10
	3/4	0.40
EYH	M16; M18; 3/4	0.80
	M24; 1-14 UNS	1.40
	M30; 1-1/4	2.70
	M36	3.70
	M42	3.80
SBMP	80	0.58
	90	0.51
SPACER; SPACERSS	1/2	0.06
	3/4	0.07
	1	0.15
RBXS	1.5t	0.23
	5t	0.75
SBX	2t	0.32
	3.25t	0.65
	4.75t	1.02
	6.5t	1.62
	9.5t	3.75
	12t	4.62
	13.5t	6.38

APPENDICIES

www.anyload.com
© 2025 ANYLOAD V1 dimensions and specifications subject to change without notice

PRODUCTS GROSS WEIGHT

Hardware & Accessories		
SBX	17t	9.43
	25t	13.2
	35t	23.7
	55t	44.6
	85t	69.9
	120t	120.2
	150t	153.3
	200t	237.0
	300t	363.0
	500t	684.0
	800t	1313.0
	1000t	2024.0
	1250t	2511.0
TBX	2t	0.13
	2.5t	0.22
	3.25t	0.31
	5t	0.72
	7t	1.10
	9.5t	1.76
	12.5t	2.58
	15t	3.70
	18t	5.06
	21t	6.70
	30t	8.42
	40t	14.2
	50t	23.3
	80t	42.1
	110t	74.8
LA2		0.80
TMA-108B	6kg; 20kg	0.80
WL900-xT/		1.34
WL900-xR		0.07
CA	CAHP20-1/2	18.0
	CAEFGI-1/2	0.10
CB4	5.1mm DIA×100m	3.20
	5.1mm DIA×500ft	5.60
	5.1mm DIA×300m	10.3
	7.6mm DIA×100m	7.90
	7.6mm DIA×500ft	12.7
	7.6mm DIA×300m	23.7
CB6	7.6mm DIA×100m	7.40
	7.6mm DIA×500ft	11.9
	7.6mm DIA×300m	22.8
CB12	7.6mm DIA×100m	9.00
	7.6mm DIA×500ft	14.4
	7.6mm DIA×300m	27.0
CB4RP	8.0mm DIA×100m	11.9
CB6RP	8.0mm DIA×100m	10.5
CB7AP	CB7-AP-7-9m	0.70
CSK		0.22
CCP		0.06
CCS		0.05
TN	3030	10.3
	4050	17.8
	4660	24.8
	6060	30.5
TNS	3030	10.9
	4050	18.9
	4646	24.6

Hardware & Accessories		
TNS	4660	25.2
	6060	31.4

Note: Above products weights are not final and exact. Gross weights subject to change without notice. Please contact us for the updated information.

APPENDICIES

www.anyload.com
© 2025 ANYLOAD V1 dimensions and specifications subject to change without notice

INTERCHANGEABLE REFERENCE CHART

Anyload	Cardinal	Coti	Flintec	HBM	Mettler–Toledo	Rice Lake	Vishay Celtron	Vishay Revere	Vishay Sensortronics	Vishay Tedea–Huntleigh	Other	Page No.
Single Ended Beams												
563RS	CB6	CG-Z6	SB8	Z6	MTB	RLHBB/RL9018SS	HBB	SHB		355		P20
563SH						RL50210		5503	60040		Artech: 50210	P21
563SHBB				BBS		RL40BBS			65087		Artech: 40310 Fairbanks: 3-481XX-1/3-48660-1	P22
563WS		CG-WB-SS				RL75000SS/RL32011WB-L*					Avery Weigh-Tronix: Weigh Bar	P24
563WS30		CG-WB-SS*									Avery Weigh-Tronix: Weigh Bar/ 27173/ 50104/ 55829/ AWT27-500080	P24
563WS-WBL		CG-WBL-SS				RL32011WB-T				3310*	Avery Weigh-Tronix: Weigh Bar	P23
563YA												P26
563YH		CG-23*				RL35023*/RL32018*/ RL30000*	SQB*	5123*	65023A*	3411*	Artech: 30310 CAS: BSA*	P27
563YH-23		CG-23				RL35023/RL32018/ RI30000	SQB	5123	65023A	3411	Artech: 30310	P28
563YHFK											Kelba: KA	P30
563YHMS		CG-SB2L/ SB2M,CG-743			0743/Massiron ML4311~4449	RLSB2MLW*/ RLSB2L*						P31
563YHRT		CG-30410						5723			Artech: 30410	P32
563YS		CG-23-SSW-02				RL35082/RLHTO			65083S	3510-kg		P29
563YS30		CG-23-SSW-03		B35*/H35*	0793	RL32018S*/RL32018S-HE*/ RL35023S*/RL35083/ RL39123	SQB-HSS	9123	65023S*/65023SS*/ /65083	3510-lbs	Artech: SS30310	P29
563YSBK			BK2									P33
563YSLB	LFB	CG-HMT										P34
563YSLF		CG-BLF		BLF							Fairbanks: 3-53581-X/3-52921-1	P35
563YSMT		CG-745		THC	MT0744*/MT0745A	RL30745						P36
563YSMT-4			SB4									P37
563YSRS		CG-SB3		SB3		RLSSB		SSB			Artech: SS30610	P38
563YSSB	SB*	CG-SB250				RLSB250*						P39
Double Ended Beams												
102BH		CG-58				RL75058	CLB	5303	65058A*	4158	Artech: 70310	P41
102BS		CG-58-SSW				RL75060S*		9303	65058S		Artech: SS70310	P42
102DH		CG-5103			SLD-430	RL70000/ RL72020		5103	60058		Artech: 70210	P44
102DS		CG-5103-SSW			SLD-530	RL70000SS /RL72019SS / RL72020SS		9103			Artech: SS70210	P45
102EH		CG-16			SLD425	RL75016	DSR	5203	65016		Artech: 70510	P46
102EHEL		CG-STR									Epelsa: STR	P43
102ES		CG-16-SSW			SLD525	RL75016SS/ RL75016WHE*	DSR-SS	9203	65016W/ 65016WH*		Artech: SS70510	P47
102FS	DB50000S/ DB75000S	CG-DB50000S				RLDB50000S/ RLDB75000S						P48
102MHML		CG-SLS									Massload: ML1100	P51
102RH		CG-5223				RL75223		5223	65040-1127W		Artech: 80210	P52
102RHGT											BIM: SDB	P53
102TH		CG-BE40				RL75040	DLB	9323*/9903*	65040A		Artech: 80310	P49
S–Type Beams												
101BH										615		P56
101BS		CGSB-SSW	ULB	RSC*		RL20001HE	STC HSS		60063	616*/620		P57

APPENDICIES

www.anyload.com
© 2025 ANYLOAD V1 dimensions and specifications subject to change without notice

Anyload	Cardinal	Coti	Flintec	HBM	Mettler–Toledo	Rice Lake	Vishay Celtron	Vishay Revere	Vishay Sensortronics	Vishay Tedea–Huntleigh	Other	Page No.
S–Type Beams												
101NH		CGSB/ CGSB-1				RL20000*/ RL20001*	STC*	363*	60001*		Artech: 20210	P58
101NH-LE						RL20001	STC		60001			P59
101NSGS		CGSB-SS			SLS-510	RL20000 SS/ RL20000 ST	STC-SS	9363	60050		Artech: SS20210	P56
Single Points												
108AA3MUN										1010 / 1015		P61
108BA			PC22*	PW6C/PW6K	MT1022	RL1521A	LPS ME			1022		P62
108BATD										1030		P63
108CA		CG-50-2		PW24A						1263		P64
108DA			PC81					HOC		1320		P66
108JA-21					MT1241					1242		P69
108KS				PC30						1130*		P72
108KSUN		CG-1130								1130*	Avery Weigh-Tronix: MK29	P72
108LAMT					MT1241							P70
108LSMT					SSP1241							P71
108MA					MT1260							P74
108MAUN		CG-50-1		PW16		RL26018A/ RLPWM16/RL1260				1260		P74
108PA				SPL						1004		P78
108QS	SP*	CG-SPL/ CG-SPLM										P76
108QSFL						RLFLS					Avery Weigh-Tronix: FLS	P77
108TA			PC42*					642C		1042		P82
108TAUN	TSP	CG-42		SP4		RL1042/RLSP4/ RL42018A		642		1042		P82
108TAAD											A&D: LC-4102	P84
108TAAL											A&D: LC-4103	P85
108TAYM; 108TAYM-01											Yamato: UH69	P81
108TS	TSSP*		PC1	PW15A						1142		P86
108TSUN				PW15		RL1140/RL1385*				1140		P86
108TSLL		CG-PWS		PWS		RL1380						P87
108TSST		CG-51							60051			P88
108TSVS		CG-60048							60048			P89
108UA	CHB*											P80
108UAUN		CG-50	PCB*	PW12/PW12B		RL1250/RL1218A	LOC	652	60060	1250		P80
108WSLP					0756							P91
651AA		CG-1010		SP10*		RL1010*				1010*/1015		P92
651HS								HPSM				P93
651KS22			PC7		SSH					1510*		P95
651KS55UN		CG-50-1*		PW16*		RL1260*				1260*		P73
651KS66			PC6									P96
651KSBC			PCB*									P97
651KSBCUN			PCB*			RLPCBC-60						P97
651TA					MT1041					1040/1041		P98

© 2025 ANYLOAD V1 dimensions and specifications subject to change without notice
www.anyload.com

Anyload	Cardinal	Coti	Flintec	HBM	Mettler–Toledo	Rice Lake	Vishay Celtron	Vishay Revere	Vishay Sensortronics	Vishay Tedea–Huntleigh	Other	Page No.
Single Points												
651TAUN		CG-40				RL1040	LOC			1040/1041		P98
Canisters												
106CS	CP1	CG-175						CP/392B				P100
106CS20		CG-26S5				RLCSP1		CSP/692B				P100
106ES	SCA	CG-26S										P101
106HS		CG-26S4		C16			ASC*					P102
106HSCP											Bilanciai: CPR-M	P103
106KS		CG-CC22			B10883600A/B10887700A						Totalcomp:T752	P104
106PS		CG-93						93				P110
106PS20		CG-92						92				P110
106RS		CG-26S6	RC3								Fairbanks: LCF HR4020-2A(30t), part number 70510	P106
106RS-FB		CG-S1 / CG-S2*	RC1			RL75114					Fairbanks: LCF HR4020-2, / LCF HR4020-19*	P107
106TS		CG-26S7			Powercell 760/MTX* /0782							P108
266ASPT											PT Global: LPX	P115
Planars												
202UA			PB			RL BLP						P120
Weigh Modules												
102BHM1						TSA			65058-TSA			P146
102BSM5						RL2100HE						P147
102DHM3						EZ Mount 1*						P148
102DSM3						EZ Mount 1 Stainless Steel						P149
102EHM2					VLM3C	RL1600			65016-TWA			P150
102ESM2					VLM3C	RL1600 HE						P152
102THM5						Translink						P153
563RSM5						1700HE						P160
563YHM2						RL1800*						P164

** May have minor differences, refer to the page for details.*

© 2025 ANYLOAD V1 dimensions and specifications subject to change without notice
www.anyload.com

Product Datasheet Disclaimer

Information Changes:
All product specifications, statements, information, and data (collectively, the "Information") in this catalog or made available elsewhere by ANYLOAD are subject to change. Customers must verify the applicability of the Information at the time of order placement.

Accuracy and Reliability:
While all Information is believed to be accurate and reliable, it is presented without guarantee, warranty, or responsibility of any kind, expressed or implied.

Laboratory Conditions:
Data listed in the datasheet is produced within controlled laboratory settings and may not be reproducible without exact replication of all metrological conditions. Users must validate that a product with the described properties is suitable for their applications.

Interchangeability:
Statements of inter changeability with other manufacturers are based on ANYLOAD's knowledge at the time of publication and are not intended to constitute any warranty concerning the substitutability of an ANYLOAD product with one made by another Manufacturer.

Warranty Voidance:
Any use of the product outside of specifications or any storage or installation inconsistent with product guidance voids any warranty.

Intended Use:
The information is intended for use only by customers who have the requisite experience and capability to determine the correct products for their application. ANYLOAD provides technical advice without obligation or liability for the advice given or results obtained.

Component Failures:
Although ANYLOAD designs and manufactures its products to stringent quality and safety standards, isolated component failures may still occur. Applications requiring high reliability or safety should employ suitable designs or safeguards to ensure that component failure does not result in personal injury or property damage.

High-Risk Applications:
Unless specifically agreed to in writing, ANYLOAD has not tested or certified its products, services, or deliverables for use in high-risk applications (e.g., medical life support, nuclear facilities, weapon systems). ANYLOAD makes no assurances that the products are suitable for high-risk uses. Under no circumstances does ANYLOAD warrant or guarantee suitability for any customer design or manufacturing process.

Contact authorized ANYLOAD personnel for special terms and conditions regarding products designed for specific safety requirements.

Safety Measures:
All product-related warnings, cautions, and notes must be observed. Customers should not assume that all safety measures are indicated or that other measures may not be required.

California Proposition 65:
⚠ **WARNIN:** Some products manufactured or distributed by ANYLOAD may contain trace amounts of chemicals known to the State of California to cause cancer, birth defects, or other reproductive harm. These substances are present in minimal quantities and are typically encapsulated within our products. This warning is provided to enable you to make informed decisions as a consumer.

www.anyload.com
© 2025 ANYLOAD V1 dimensions and specifications subject to change without notice

SPECIAL REQUIREMENT

Customer Name: _____ Company: _____

Address: _____

_____

City. State. Zip: _____ Country: _____

Email: _____ Website: _____

Phone: _____ Fax: _____

TYPE OF PRODUCT:

☐ Single Ended Beams ☐ S-Beams ☐ Single Points ☐ Double Ended Beams
☐ Disks & Canisters ☐ Tension & Compression Spokes ☐ Load Pins ☐ Load Buttons
☐ Weigh Modules ☐ Hardware & Accessories ☐ Electronics

TYPE OF BUSINESS:

☐ Engineering House ☐ Export Trading Firm ☐ Scale & Load Cell Dealer ☐ Scale Manufacturer
☐ Equipment Manufacturer ☐ System Integrator ☐ Repair & Maintenance ☐ Other Type Of Business

Describe the application: _____

_____

Are there any load cell or system certifications required ?
☐ OIML ☐ NTEP ☐ ATEX ☐ UL ☐ CSA ☐ FM ☐ RoHs
☐ CE ☐ Ex ☐ Other Certification _____

Special features: _____

_____

Do you have a target price for the product ? _____

Quantities expected: _____

Please fill out the form above, and fax or mail it to our customer services managers who are at your entire disposal to evaluate your specific requirement. You will be contacted immediately when we have results.

http://www.anyload.com
E-mail: info@anyload.com

ANYLOAD®

anyload®

CONTACT:

Toll Free: 1-855-ANYLOAD [269-5623]
Email: info@anyload.com
www.anyload.com

Anyload LLC
12-16 Littell Road. Units 8B & 8C
East Hanover, NJ 07936, USA

Anyload Weigh & Measure Inc
6855 Antrim Avenue
Burnaby, BC V5J 4M5, Canada